# CASS COUNTY ROAD COMMISSION

## IN COOPERATION WITH THE POKAGON BAND OF THE POTAWATOMI INDIANS AND THE FEDERAL HIGHWAY ADMINISTRATION

## PLAN AND PROFILE OF PROPOSED

# SINK ROAD BRIDGE AND CANOE RAMP OVER THE DOWAGIAC RIVER

FEDERAL PROJECT No. #F60-14306
FEDERAL ITEM No. #

## NOTES

EXCEPT WHERE OTHERWISE INDICATED ON THESE PLANS OR IN THE PROPOSAL AND SUPPLEMENTAL SPECIFICATIONS CONTAINED THEREIN, ALL MATERIALS AND WORKMANSHIP SHALL BE IN ACCORDANCE WITH THE 2003 MICHIGAN DEPARTMENT OF TRANSPORTATION STANDARD SPECIFICATIONS FOR CONSTRUCTION.

THE PLACING OF PAVEMENT MARKINGS AND TRAFFIC CONTROL SIGNS SHALL BE DONE IN ACCORDANCE WITH THE 2005 MICHIGAN MANUAL OF UNIFORM TRAFFIC CONTROL DEVICES AS AMENDED.

THE CONTRACTOR SHALL DIAL MISS DIG @ 811 FOR PROTECTION OF UNDER GROUND UTILITIES AND IN CONFORMANCE WITH PUBLIC ACT 53 OF 1974 A MINIMUM OF THREE FULL WORKING DAYS, EXCLUDING SATURDAYS, SUNDAYS AND HOLIDAYS PRIOR TO BEGINNING EACH EXCAVATION IN AREAS WHERE PUBLIC UTILITIES HAVE NOT BEEN PREVIOUSLY LOCATED. MEMBERS WILL THUS BE ROUTINELY NOTIFIED. THIS DOES NOT RELIEVE THE CONTRACTOR OF THE RESPONSIBILITY OF NOTIFYING UTILITY OWNERS WHO MAY NOT BE A PART OF THE "MISS DIG" ALERT SYSTEM.

THE DESIGN OF THIS STRUCTURE IS BASED ON 1.2 TIMES THE CURRENT AASHTO LRFD BRIDGE DESIGN SPECIFICATION HL-93 LOADING WITH THE EXCEPTION THAT THE DESIGN TANDEM PORTION OF THE HL-93 LOAD DEFINITION SHALL BE REPLACED BY A SINGLE 60 KIP AXLE LOAD BEFORE APPLICATION OF THIS 1.2 FACTOR. THE RESULTING LOAD IS DESIGNATED HL-93 MOD. LIVE LOAD PLUS DYNAMIC LOAD ALLOWANCE DEFLECTION DOES NOT EXCEED (1/800) OF SPAN LENGTH.

THE DESIGN OF THE STRUCTURAL MEMBERS IS BASED ON MATERIAL OF THE FOLLOWING GRADES AND STRESSES:

| | | |
|---|---|---|
| CONCRETE: GRADE S2 | f'c = | 3,000 PSI |
| CONCRETE: GRADE D | f'c = | 4,000 PSI |
| STEEL REINFORCEMENT | fy = | 60,000 PSI |
| STEEL REINFORCEMENT: STIRRUPS FOR PRESTRESSED BEAMS | fy = | 60,000 PSI |
| PRESTRESSED CONCRETE | f'c = | 5,000 PSI |
| PRESTRESSED STRANDS | fs = | 270,000 PSI |

ALL EXPOSED CONCRETE CORNERS SHOWN SQUARE ON THE PLANS SHALL BE BEVELED WITH 1/2" TRIANGULAR MOLDINGS EXCEPT AS OTHERWISE NOTED.

THE DESIGN OF THE FOUNDATION PILING IS BASED ON MATERIAL OF THE FOLLOWING GRADES AND STRESSES:

FOUNDATION PILING (STEEL H-PILING):
AASHTO M270
GRADE 50 Fy = 50,000 PSI

UNLESS OTHERWISE SHOWN ON THE PLANS PROVIDE MINIMUM CONCRETE CLEAR COVER FOR REINFORCEMENT ACCORDING TO THE FOLLOWING:

| | |
|---|---|
| CONCRETE CAST AGAINST EARTH: | 3 IN. |
| PRESTRESSED BEAMS: | 1 IN. |
| ALL OTHER UNLESS SHOWN ON PLANS: | 2 IN. |

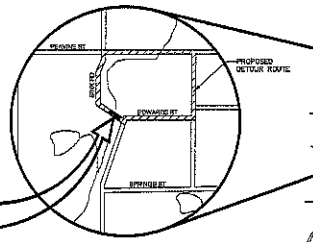


**PROJECT LOCATION**

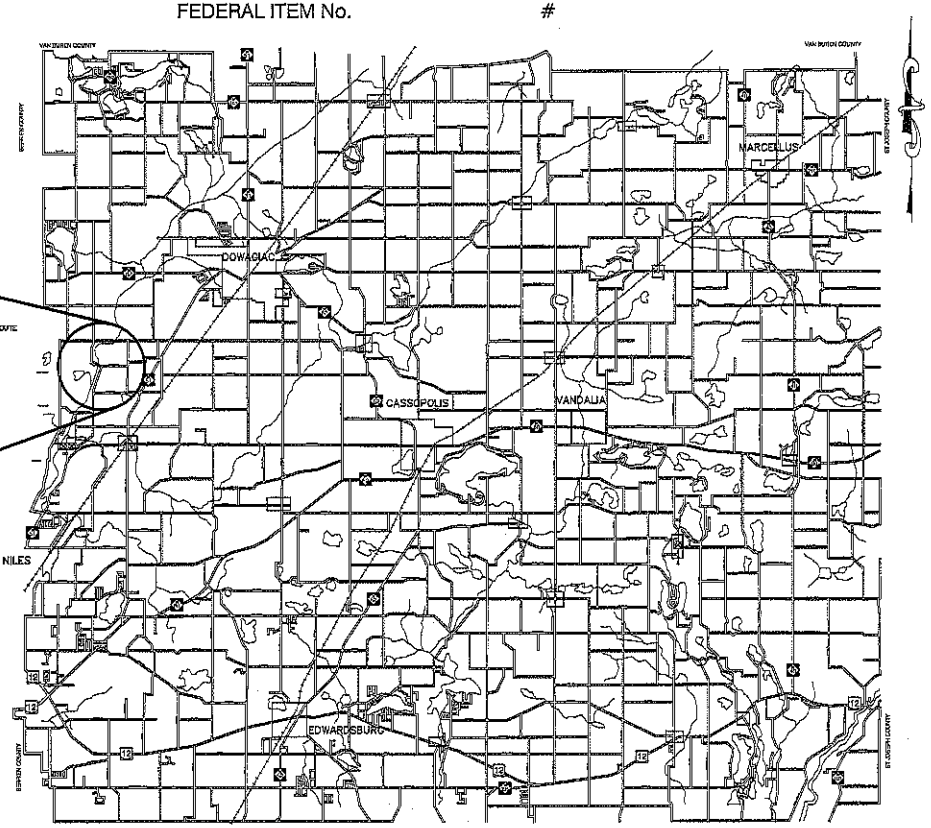


CASS COUNTY
NOT TO SCALE

## INDEX OF PLANS


| SHEET No. | DESCRIPTION |
|---|---|
| 110288-01 | COVER SHEET |
| 110288-02 | GENERAL PLAN OF SITE |
| 110288-03 | SOIL BORINGS AND ROAD SECTIONS |
| 110288-04 | GENERAL PLAN OF STRUCTURE |
| 110288-05 | ABUTMENT "A" DETAILS |
| 110288-06 | ABUTMENT "B" DETAILS |
| 110288-07 | BOX BEAM DETAILS |
| 110288-08 | SUPERSTRUCTURE DETAILS |
| 110288-09 | RAILING DETAILS |
| 110288-10 | REINFORCING STEEL DETAILS |
| 110288-11 | CANOE RAMP DETAILS |
| 110288-12 | SOIL EROSION AND SEDIMENTATION CONTROL PLAN AND PAVEMENT MARKING AND PERMANENT SIGNAGE PLAN |
| 110288-13 | DETOUR AND SIGNAGE SHEET |
| 110288-14 | QUANTITY SHEET |
| | M.D.O.T. ROAD STANDARD PLANS |
| R-32-E | APPROACH CURB & GUTTER, DOWNSPOUTS (FOR BRIDGE APPROACH CURB AND GUTTER) |
| R-60-H | GUARDRAIL, TYPES A, B, BD, T AND TD |
| R-62-G | GUARDRAIL APPROACH TERMINAL TYPES 2B & 2T (ET & SKT) |
| R-67-F | GUARDRAIL ANCHORAGE, BRIDGE, DETAILS |
| R-68-D | STEEL END SECTION |
| R-96-E | SOIL EROSION & SEDIMENTATION CONTROL MEASURES |
| B-23-G | BRIDGE RAILING, AESTHETIC PARAPET TUBE |
| B-103-E | WELDING, SHOP, TORY WASHERS, ANCHOR BOLT ASSEMBLY AND NAME PLATE DETAILS |


## UTILITIES

| | |
|---|---|
| GAS | SEMCO<br>1600 BELL RD<br>NILES, MI 49120<br>(800) 476-1441 EXT. 5689 OR 5692<br>MICHAEL KESSLER |
| TELEPHONE | FRONTIER COMMUNICATIONS<br>601 N. US-131<br>THREE RIVERS, MI 49093<br>(269) 273-0348<br>SCOTT MACFARLANE |
| ELECTRIC | MIDWEST ENERGY COOPERATIVE<br>901 E. STATE ST.<br>CASSOPOLIS, MI 49031<br>(269) 445-1033<br>MIKE ROUSH |
| CABLE | COMCAST<br>1620 MCKINLEY AVE.<br>MISHAWAKA, IN 46545<br>(847) 789-1039 EXT. 71039<br>JAY CASTELLO |
| "MISS DIG" | 811 |

## TRAFFIC DATA

| | |
|---|---|
| DESIGN SPEED | 55 MPH |
| POSTED SPEED | 55 MPH |
| ADT (2024) | 366 |
| ADT (2024) | 570 |
| % TRUCKS | 1 |

CASS COUNTY ROAD COMMISSION
340 N. D'KEEFE ST.
CASSOPOLIS, MI 49031

**APPROVAL**

| | | |
|---|---|---|
| LEROY KREMPEC | CHAIRMAN | DATE 12/15/11 |
| CLIFFORD E. POEHLMAN | VICE CHAIRMAN | DATE 12-15-11 |
| ROGER BOWSER | MEMBER | DATE 12/15/11 |
| THOMAS CEDE | MEMBER | DATE 12/15/11 |
| PETE FOURNIER | MEMBER | DATE 12-15-11 |
| LOUIS R. CEDKASY | MANAGER | DATE 12/15/2011 |


WIGHTMAN & ASSOCIATES, INC.
ENGINEERING ◆ SURVEYING ◆ ARCHITECTURE
2303 PIPESTONE ROAD BENTON HARBOR, MI 49022
PHONE: (269) 927-0100 FAX: (269) 927-1300
WWW.WIGHTMAN-ASSOC.COM


PREPARED UNDER THE SUPERVISION OF:

STATE OF MICHIGAN
OSCAR R. LOVELESS
PROFESSIONAL ENGINEER
No. 47905

OSCAR R. LOVELESS 12/09/2011
OSCAR R. LOVELESS
REGISTERED PROFESSIONAL ENGINEER No. 47905

SEPTEMBER, 2011 110288-01

©

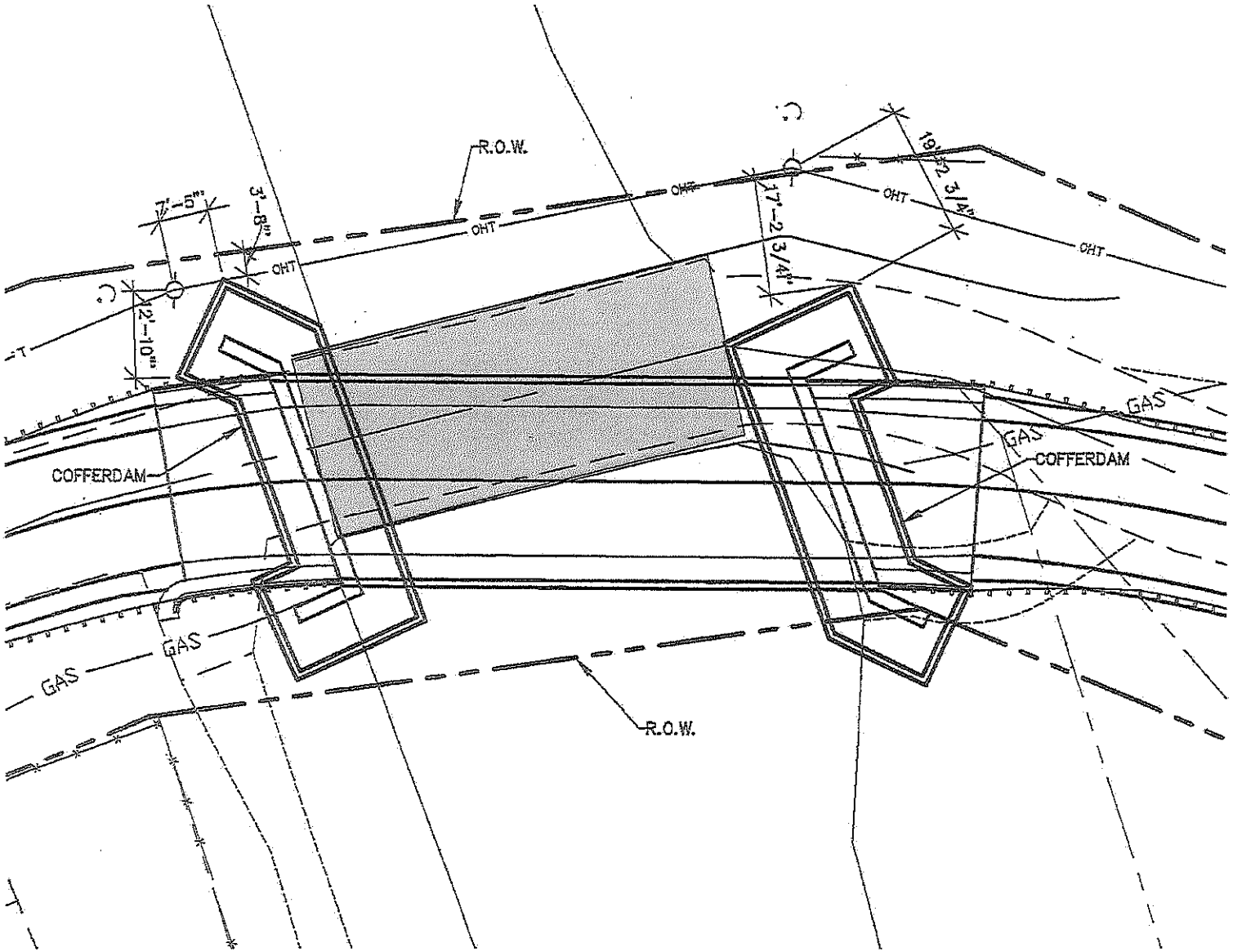


SK_2011_11_30

SCALE: 1" = 20

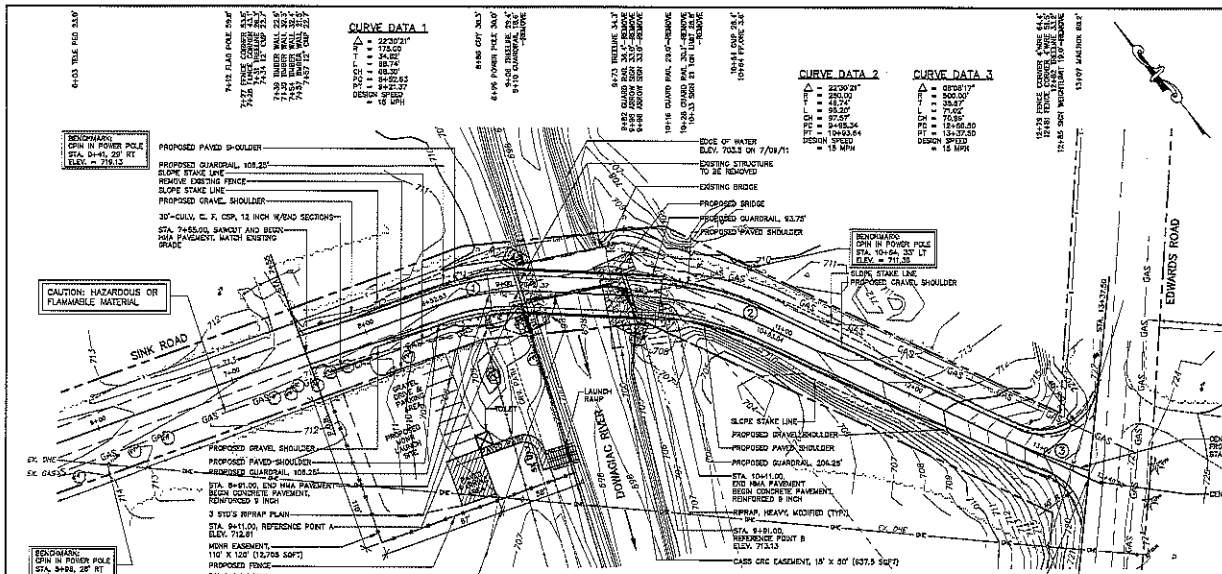


PLAN – SINK ROAD BRIDGE – STA. 7+55 TO STA. 12+50

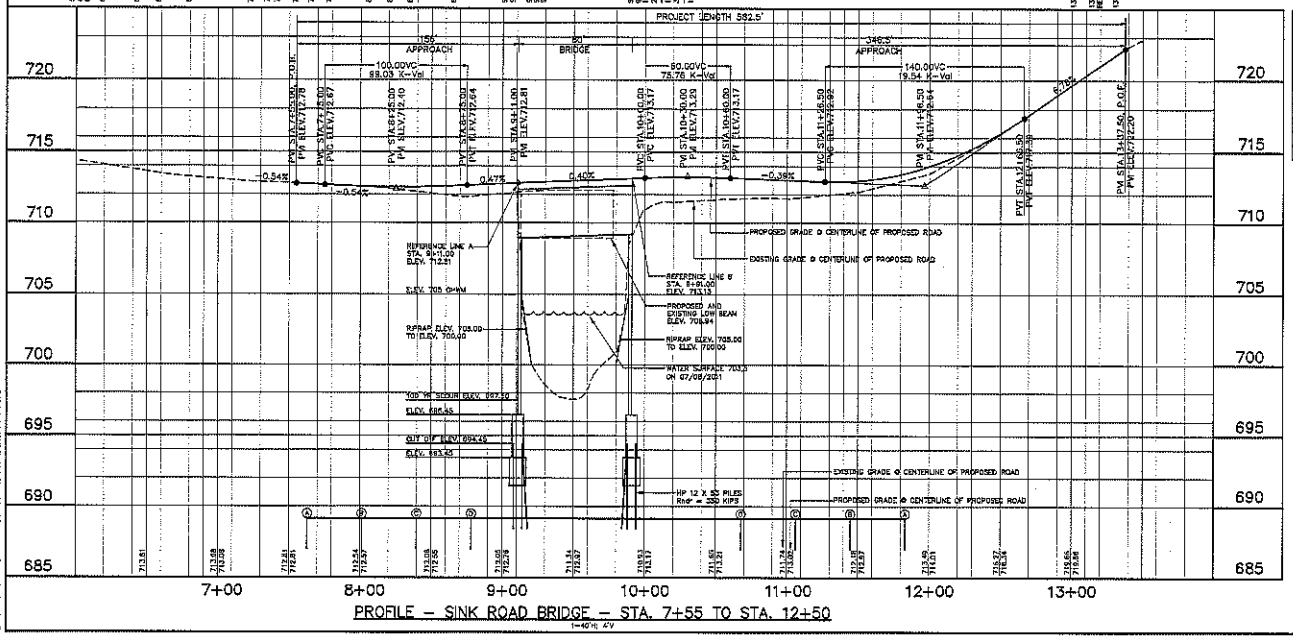


PROFILE – SINK ROAD BRIDGE – STA. 7+55 TO STA. 12+50

## NOTES

THE WORK COVERED BY THESE PLANS INCLUDES CLEARING, TREE REMOVAL, CHANNEL EXCAVATION, EARTH EXCAVATION, MAINTAINING TRAFFIC, CONSTRUCTION OF THE PROPOSED BRIDGE AND PLACING RIPRAP TO THE LIMITS SHOWN.

TRAFFIC IS TO BE DETOURED OVER OTHER EXISTING ROADS.

PLAN ELEVATIONS REFER TO NVGD 29 DATUM.

WATER LEVEL IS SUBJECT TO CHANGE. THE CONTRACTOR IS RESPONSIBLE FOR MAKING A DETERMINATION OF WATER LEVELS THAT MAY EXIST DURING CONSTRUCTION.

MEASURES SHALL BE TAKEN TO PREVENT DEBRIS FROM FALLING FROM THE STRUCTURE. IF DEBRIS FALLS INTO THE WATERWAY, IT SHALL BE REMOVED WITHIN 24 HOURS. SINCE DISTURBANCE OF THE WATERWAY BOTTOM MAY BE AS HARMFUL AS THE DEBRIS ITSELF, THE PREVENTIVE MEASURES MUST BE EFFECTIVE.

IMMEDIATELY AFTER THE CONSTRUCTION OF AN ABUTMENT IS COMPLETED, SLOPE PROTECTION AND SEEDING OR SODDING SHALL BE PLACED ON THE ADJACENT EMBANKMENT SLOPES.

THE CONTRACTOR SHALL DIAL MISS DIG @ 811 FOR PROTECTION OF UNDER GROUND UTILITIES AND IN CONFORMANCE WITH PUBLIC ACT 53 OF 1974 A MINIMUM OF THREE FULL WORKING DAYS, EXCLUDING SATURDAYS, SUNDAYS AND HOLIDAYS PRIOR TO BEGINNING EACH EXCAVATION IN AREAS WHERE PUBLIC UTILITIES HAVE NOT BEEN PREVIOUSLY LOCATED. MEMBERS WILL THUS BE ROUTINELY NOTIFIED. THIS DOES NOT RELIEVE THE CONTRACTOR OF THE RESPONSIBILITY OF NOTIFYING UTILITY OWNERS WHO MAY NOT BE A PART OF THE "MISS DIG" ALERT SYSTEM.

NOMENCLATURE – BRIDGE NORTH ORIENTATION IS TO TOP OF PAGE OR UPSTREAM SIDE.

## QUANTITIES THIS SHEET

| ITEM | QTY. | |
|---|---|---|
| Mobilization, Max. ___10% | 1 | LS |
| Tree, Rem, 18 Inch to 36 Inch | 2 | Ea |
| Tree, Rem, 37 Inch or larger | 1 | Ea |
| Tree, Rem, 6 Inch to 18 Inch | 3 | Ea |
| Guardrail, Rem | 46 | Ft |
| Fence, Rem | 117 | Ft |
| Structures, Rem (B01 of 14-01-26) | 1 | LS |
| Subgrade Undercutting, Type II | 100 | Cyd |
| _Machine Grading, Special | 6 | Sta |
| Aggregate Base, 8 Inch | 1,468 | Syd |
| Approach, Cl II, 8 Inch | 65 | Syd |
| Shoulder, Cl II, 6 Inch | 133 | Syd |
| Culv, Cl F, CSP, 12 Inch | 30 | Ft |
| Culv End Sect, Metal, 12 Inch | 2 | Ea |
| HMA, 13A | 218 | Ton |
| HMA, 36A | 109 | Ton |
| _HMA Surface, Rem, Modified | 1,240 | Syd |
| Conc Pvmt, Reinf, 9 Inch | 129 | Syd |
| Curb and Gutter, Bridge Approach | 69 | Ft |
| Guardrail, Type B | 188 | Ft |
| Guardrail, Anch, Bridge, Det T2 | 4 | Ea |
| Guardrail Approach Terminal, Type 2B | 4 | Ea |
| Guardrail Reflector | 38 | Ea |
| Sign, Type III, Rem | 9 | Ea |
| Riprap, Plain | 3 | Syd |
| Fertilizer, Chemical Nutrient, Cl A | 14 | Lb |
| Mulch | 497 | Syd |
| Mulch Blanket | 124 | Syd |
| Seeding, Mixture TUF | 30 | Lb |
| Topsoil Surface, Salv, 3 Inch | 621 | Syd |

PART B WORK, ALL OTHER WORK PART A

## LOCATION

| COUNTY | TOWNSHIP | RANGE | CASS | POKAGON | SEC 17 |
|---|---|---|---|---|---|
| | 7S | 16W | | | |

## EXISTING STRUCTURE

ONE SPAN CONCRETE BOX BEAM BRIDGE ON CONCRETE ABUTMENTS BUILT IN 1963. TOTAL LENGTH 88' CLEAR WIDTH 28' AND TOTAL WIDTH OF 28'-5"

## SUMMARY OF HYDRAULIC ANALYSIS

| | EXISTING | | | PROPOSED | | | |
|---|---|---|---|---|---|---|---|
| FLOOD DATA | DISCHARGE (CFS) | WATER SURFACE ELEV. AT U/S FACE OF STRUCTURE (FT) | VELOCITY IN D/S CHANNEL (FT/S) | WATER SURFACE ELEV. AT U/S FACE OF STRUCTURE (FT) | VELOCITY IN D/S CHANNEL (FT/S) | WATERWAY AREA (SQ. FT) AT D/S FACE | CHANGE IN WS EL 84 FT U/S OF PROPOSED STRUCTURE (FT) |
| 50 YR | 1500 | 707.00 | 2.88 | 707.00 | 3.19 | 470.53 | 0 |
| 100 YR | 1800 | 707.23 | 2.97 | 707.23 | 3.29 | 488.38 | 0 |
| MAXIMUM BRIDGE AREA BELOW LOW CHORD IS 686.13 SQUARE FEET | | | | | | | |

THE DRAINAGE AREA CONTRIBUTORY TO THIS CROSSING IS 210.56 SQUARE MILES.

THE WATER SURFACE AND/OR ENERGY GRADE ELEVATIONS SHOWN ON THE ABOVE HYDRAULIC TABLE ARE TO BE USED FOR COMPARISON PURPOSES ONLY AND ARE NOT TO BE USED FOR ESTABLISHING A REGULATORY FLOOD PLAIN.

WITHOUT THE PREVENTIVE MEASURES SHOWN ON THESE PLANS, THERE IS A POSSIBILITY THAT STREAM BED SCOUR MAY OCCUR. THE ESTIMATED TOTAL SCOUR DEPTH IS CALCULATED TO BE ELEVATION 697.50 FEET AT ABUTMENT A THESE DEPTHS ARE BASED ON A 100 YEAR RUNOFF EVENT.

## SUPERELEVATION DETAILS

| STATION | CURVE #1 | LT ELEV. | C/L ELEV. | RT ELEV. |
|---|---|---|---|---|
| (A) 7+92.89 | 4% 2% | 712.53 | 712.73 | 712.63 |
| (B) 8+01.35 | 4% 2% | 712.55 | 712.56 | 712.38 |
| (C) 8+39.81 | 4% | 712.73 | 712.53 | 712.33 |
| (D) 8+76.27 | 4% | 713.05 | 712.65 | 712.25 |

| STATION | CURVE #2 | LT ELEV. | C/L ELEV. | RT ELEV. |
|---|---|---|---|---|
| (D) 13+67.90 | 4% | 713.54 | 713.14 | 712.74 |
| (C) 11+06.36 | 4% | 713.19 | 712.99 | 712.79 |
| (B) 11+44.82 | 4% 2% | 713.09 | 713.09 | 712.88 |
| (A) 11+83.28 | 4% 2% | 713.54 | 712.74 | 713.54 |

TRANSITION ROAD GRADES UNIFORMLY BETWEEN SECTIONS SHOWN

| NO. | DESCRIPTION | DATE |
|---|---|---|
| 03 | FINAL PLAN ISSUE | 12/05/2011 |
| 02 | GRADE INSPECTION COMMENTS | 11/30/2011 |
| 01 | GRADE INSPECTION ISSUE | 11/09/2011 |

ANY REPRODUCTION OR OTHER USE OF THIS DRAWING WITHOUT WRITTEN CONSENT IS PROHIBITED. © 2011 WIGHTMAN & ASSOCIATES, INC.

WIGHTMAN & ASSOCIATES, INC.
ENGINEERING ◆ SURVEYING ◆ ARCHITECTURE
2383 PIPESTONE ROAD
BENTON HARBOR, MI 49022
PHONE: (269) 927-0100
FAX: (269) 927-1390
WWW.WIGHTMAN-ASSOC.COM

CASS COUNTY ROAD COMMISSION
CASS COUNTY, MICHIGAN

SINK ROAD BRIDGE REPLACEMENT OVER DOWAGIAC RIVER

GENERAL PLAN OF SITE

JOB NO. 110288

DRAWN BY T.J.R. | CHECKED BY [illegible]

DATE SEPTEMBER, 2011

SCALE 1" = 40'H, 4'V

110288_02

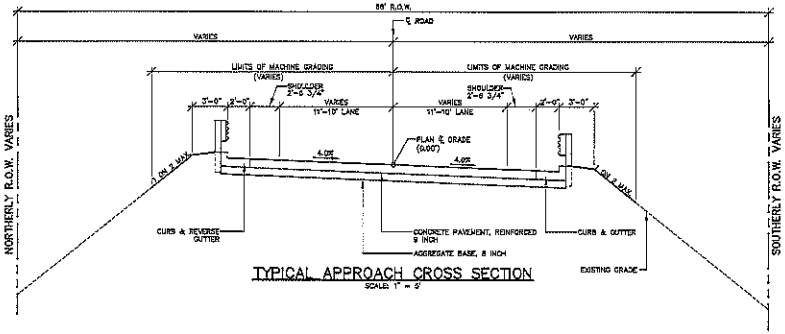


TYPICAL APPROACH CROSS SECTION

SCALE: 1" = 5'

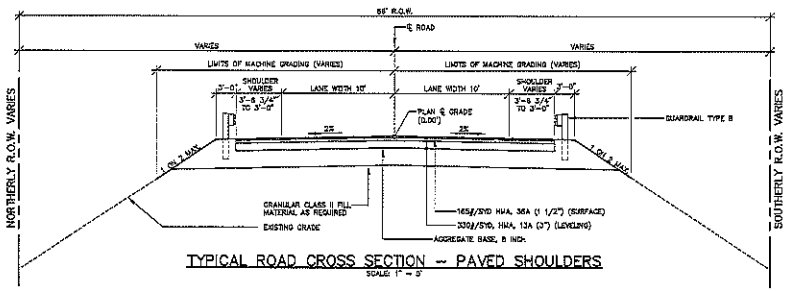


TYPICAL ROAD CROSS SECTION – PAVED SHOULDERS

SCALE: 1" = 5'

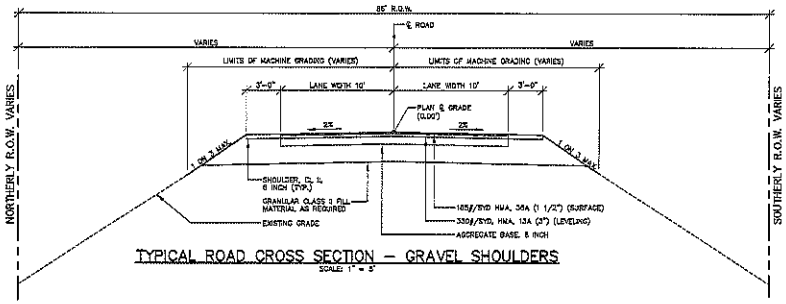


TYPICAL ROAD CROSS SECTION – GRAVEL SHOULDERS

SCALE: 1" = 5'

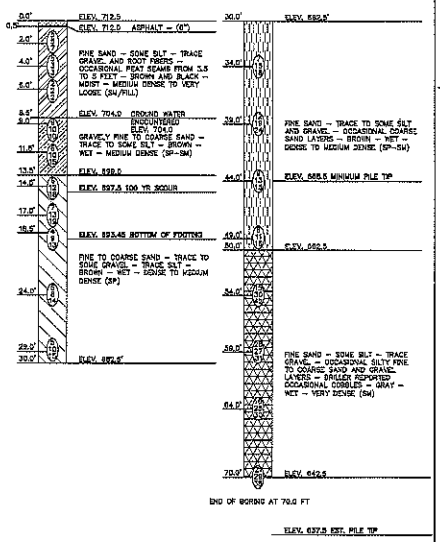


SOIL BORING NO. 1

B+39, 24' LT

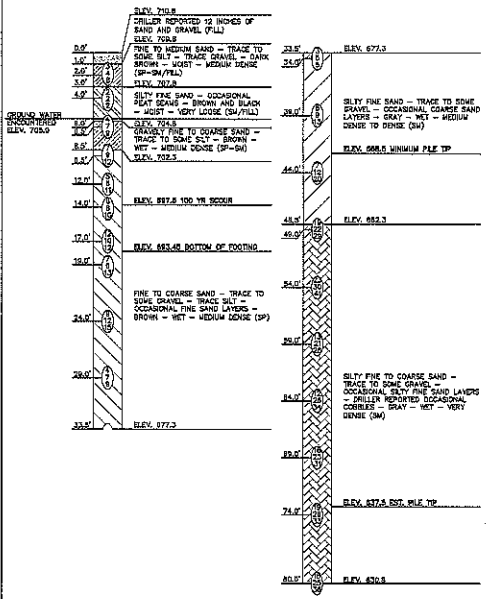


SOIL BORING NO. 2

B+98, 17' RT

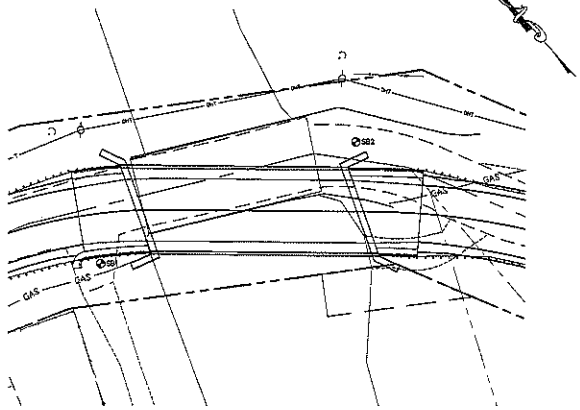


SOIL BORING LOCATION PLAN

SCALE: 1" = 20'

## NOTES – SOIL BORINGS

NUMBER IN CIRCLE DENOTES NUMBER OF BLOWS REQUIRED TO DRIVE A 2" O.D. x 1 1/2" I.D. SPLIT SPOON SAMPLER 6 INCHES USING A 140 LB HAMMER FALLING 30".

1ST 6 INCHES
2ND 6 INCHES
3RD 6 INCHES

WATER LEVELS MAY BE INFLUENCED BY RESIDUAL BORING WATER.

THE CONSISTENCY OF THE BORINGS WAS DETERMINED BY INSPECTION OF SAMPLES AND SOIL RESISTANCE TO PENETRATION BY AUGER.

THE SOIL BORINGS WERE TAKEN ON 07/05/2011 & 07/06/2011 BY SOILS AND MATERIALS ENGINEERS, INC. 3301 IRISH CIRCLE DRIVE KALAMAZOO, MI 49008 269-323-3555 FAX 269-323-3553

THE TEST BORINGS REPRESENT POINT INFORMATION AND MAY NOT HAVE ENCOUNTERED ALL OF THE TYPES AND MATERIALS WHICH ARE PRESENT AT THE SITE. THESE BORING LOGS DO NOT CONSTITUTE A GUARANTEE OF THE SOIL OR GROUNDWATER CONDITIONS OR THAT THE TEST BORINGS ARE AN EXACT REPRESENTATION OF THE SOIL OR GROUNDWATER CONDITIONS AT ALL POINTS ON THE SITE.

ALL PILES SHALL BE DRIVEN TO A MINIMUM PILE PENETRATION ELEV. 668.5 ABUTMENT A & ELEV. 668.5 ABUTMENT B. MINIMUM PILE PENETRATION MUST BE REACHED REGARDLESS OF ABSOLUTE REFUSAL AS DEFINED IN THE STANDARD SPECIFICATIONS. ANY JETTING OR PREDRILLING OR OTHER METHODS TO ADVANCE THE PILES TO THE MINIMUM PENETRATION SHALL BE INCLUDED IN THE ITEM PILE, STEEL, FURN AND DRIVEN, 12 INCH, LRFD.

| ITEM | AWI | YIELD | PERFORMANCE GRADE |
|---|---|---|---|
| HMA, 13A, (LEVELING) | | 330#/SYD | P.G. 64 – 22 |
| HMA, 36A, (SURFACE) | 280 | 165#/SYD | P.G. 64 – 22 |
| HMA BOND COAT (NOT A PAY ITEM) | | 0.05 TO 0.15 GAL/SYD | 35 – 1h |

HMA APPLICATION TABLE

| REV'S | DESCRIPTION | BY | DATE |
|---|---|---|---|
| 01 | FINAL PLAN ISSUE | GRL | 10/09/2011 |
| 02 | GRADE INSPECTION COMMENTS | GRL | 11/29/2011 |
| 01 | GRADE INSPECTION ISSUE | GRL | 11/09/2011 |

THE INFORMATION CONTAINED ON THIS DRAWING IS THE PROPERTY OF WIGHTMAN & ASSOCIATES, INC. AND IS NOT TO BE USED IN WHOLE OR IN PART WITHOUT WRITTEN CONSENT IS PROHIBITED. © 2011 WIGHTMAN & ASSOCIATES, INC.

WIGHTMAN & ASSOCIATES, INC.
ENGINEERING ◆ SURVEYING ◆ ARCHITECTURE
2380 PIPESTONE ROAD
BENTON HARBOR, MI 49022
PHONE: (269) 927-0100
FAX: (269) 927-1190
www.wightman-assoc.com

CASS COUNTY ROAD COMMISSION
CASS COUNTY, MICHIGAN

SINK ROAD BRIDGE REPLACEMENT OVER DOWAGIAC RIVER

SOIL BORINGS AND ROAD SECTIONS

JOB NO. 110288

DRAWN BY T.J.R.
CHECKED BY
DATE SEPTEMBER, 2011
SCALE AS SHOWN

110288_03

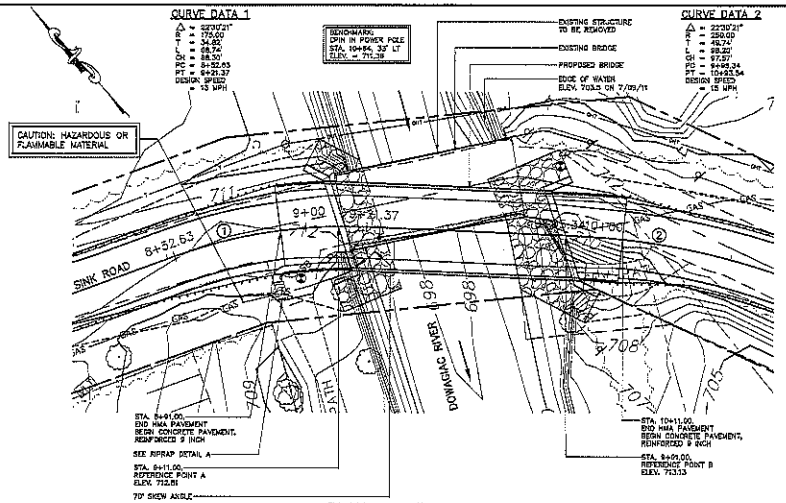


## PLAN – SINK ROAD BRIDGE
SCALE: 1" = 20'

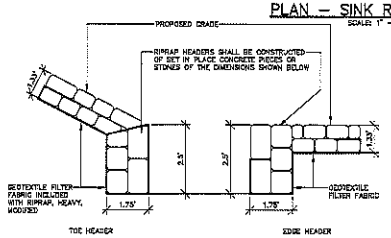


## RIPRAP HEADER DETAILS

RIPRAP HEADERS SHALL BE PROVIDED ALONG THE TOE OF SLOPE AND ALONG THE EDGE OF RIPRAP – INCLUDED WITH RIPRAP, HEAVY, MODIFIED.

THE CONTRACTOR SHALL INSTALL A GEOTEXTILE LINER PER MDOT STD. SPEC. 8.10.04-3 BENEATH THE RIPRAP, HEAVY, MODIFIED. THE CONTRACTOR SHALL EXCAVATE FOR THE RIPRAP, CAREFULLY PLACE THE FILTER FABRIC ONTO THE SUBGRADE PER MANUFACTURERS' REQUIREMENTS. THEN PLACE THE RIPRAP AS SPECIFIED. FILTER FABRIC SHALL BE INCLUDED WITH RIPRAP, HEAVY, MODIFIED.

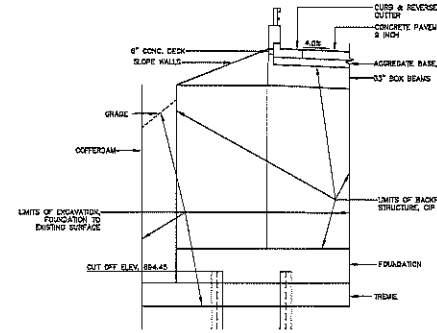


## TYPICAL APPROACH SECTION
SCALE: 1" = 5'

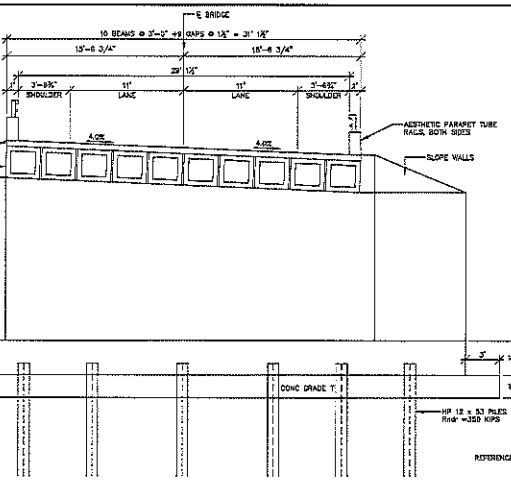


## SECTION C–C
ABUTMENT "B" SHOWN
SCALE: 1" = 5'

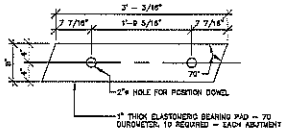


## BEARING PAD DETAIL
SCALE: 1" = 1"

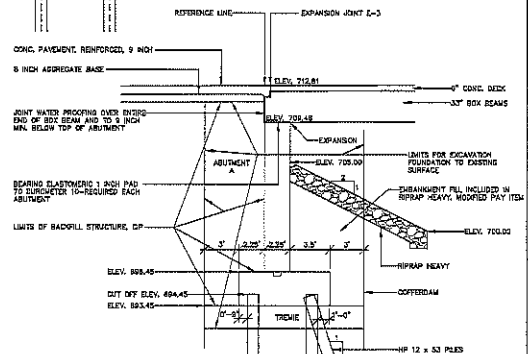


## SECTION THROUGH ABUTMENT
SCALE: 1" = 5'

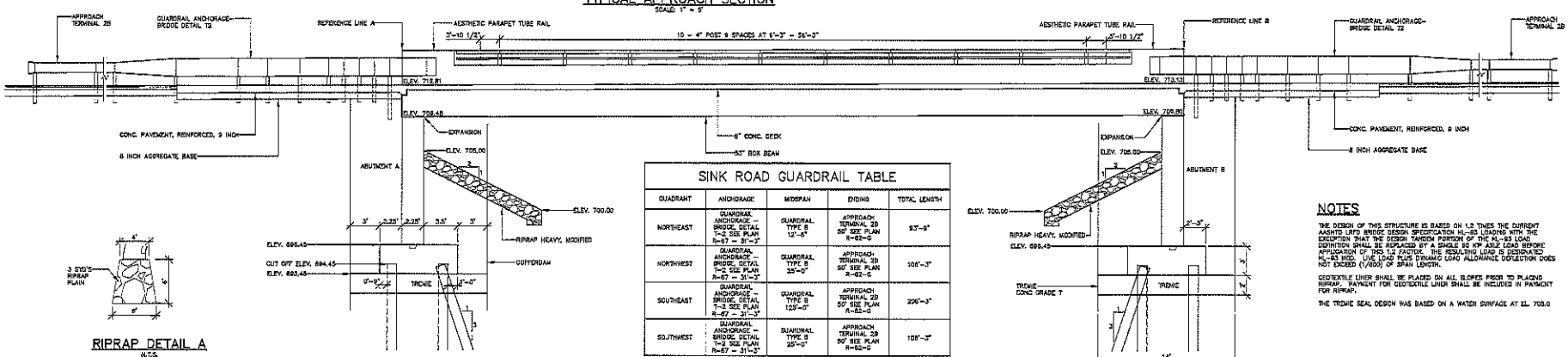


DEPENDING ON DEPTH OF COFFERDAM SHEETING, THIS DIMENSION MAY NEED TO BE ADJUSTED SO SHEET PILING WILL NOT INTERFERE WITH BATTERED PILES




## RIPRAP DETAIL A
N.T.S.

## SINK ROAD GUARDRAIL TABLE

| QUADRANT | ANCHORAGE | MIDSPAN | ENDING | TOTAL LENGTH |
|---|---|---|---|---|
| NORTHEAST | GUARDRAIL ANCHORAGE – BRIDGE, DETAIL T-2 SEE PLAN R=67' – 3½" | GUARDRAIL TYPE B 12'–6" | APPROACH TERMINAL 2B 50' SEE PLAN R=62'–6 | 93'–9" |
| NORTHWEST | GUARDRAIL ANCHORAGE – BRIDGE, DETAIL T-2 SEE PLAN R=67' – 3½" | GUARDRAIL TYPE B 25'–0" | APPROACH TERMINAL 2B 50' SEE PLAN R=62'–6 | 106'–3" |
| SOUTHEAST | GUARDRAIL ANCHORAGE – BRIDGE, DETAIL T-2 SEE PLAN R=67' – 3½" | GUARDRAIL TYPE B 125'–0" | APPROACH TERMINAL 2B 50' SEE PLAN R=62'–6 | 206'–3" |
| SOUTHWEST | GUARDRAIL ANCHORAGE – BRIDGE, DETAIL T-2 SEE PLAN R=67' – 3½" | GUARDRAIL TYPE B 25'–0" | APPROACH TERMINAL 2B 50' SEE PLAN R=62'–6 | 106'–3" |

## SECTION B–B
SCALE: 1" = 5'
ELEVATION

## NOTES

THE DESIGN OF THIS STRUCTURE IS BASED ON 1.2 TIMES THE CURRENT AASHTO LRFD BRIDGE DESIGN SPECIFICATION HL–93 LOADING WITH THE EXCEPTION THAT THE DESIGN TANDEM PORTION OF THE HL–93 LOAD DEFINITION SHALL BE REPLACED BY A SINGLE 80 KIP AXLE LOAD BEFORE APPLICATION OF THE 1.2 FACTOR. THE RESULTING LOAD IS DESIGNATED HL–93 MOD. LIVE LOAD PLUS DYNAMIC LOAD ALLOWANCE DEFLECTION DOES NOT EXCEED (1/800) OF SPAN LENGTH.

GEOTEXTILE LINER SHALL BE PLACED ON ALL SLOPES PRIOR TO PLACING RIPRAP. PAYMENT FOR GEOTEXTILE LINER SHALL BE INCLUDED IN PAYMENT FOR RIPRAP.

THE TREMIE SEAL DESIGN WAS BASED ON A WATER SURFACE AT EL. 703.0

## QUANTITIES THIS SHEET

| ITEM | QTY. |
|---|---|
| Backfill, Structure, CIP | 321 Cyd |
| Excavation, Fdn | 856 Cyd |
| Joint, Expansion, E3 | 68 Ft |
| Conc, Grade T | 124 Cyd |
| Bearing, Elastomeric, 1 Inch | 40 Sft |
| Joint Waterproofing | 297 Sft |

| REV. | DATE | DESCRIPTION |
|---|---|---|
| 03 | 11/09/2011 | FINAL PLAN ISSUE |
| 02 | 11/29/2011 | GRADE DISTRIBUTION COMMENTS |
| 01 | 11/09/2011 | GRADE DISTRIBUTION ISSUES |

© REPRODUCTION, DOWNLOADING OR OTHER USE OF THIS DRAWING WITHOUT CONSENT IS PROHIBITED. © 2011 WIGHTMAN & ASSOCIATES, INC.

WIGHTMAN & ASSOCIATES, INC.
ENGINEERING ◆ SURVEYING ◆ ARCHITECTURE
2393 PIPESTONE ROAD
BENTON HARBOR, MI 49022
PHONE: (269) 927-0100
FAX: (269) 927-1300
www.WightmanAssoc.com

CASS COUNTY ROAD COMMISSION
CASS COUNTY, MICHIGAN

SINK ROAD BRIDGE REPLACEMENT OVER DOWAGIAC RIVER

GENERAL PLAN OF STRUCTURE

JOB NO. 110255

DESIGNED BY T.J.R.
DRAWN BY T.J.R.
CHECKED BY W.H.S.
DATE SEPTEMBER, 2011
SCALE AS SHOWN

110288_04

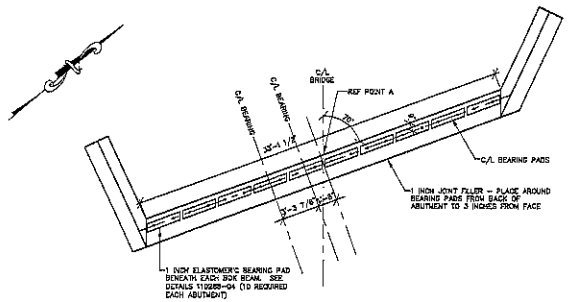


PLAN TOP OF - ABUTMENT "A"
SCALE: 1" = 5'

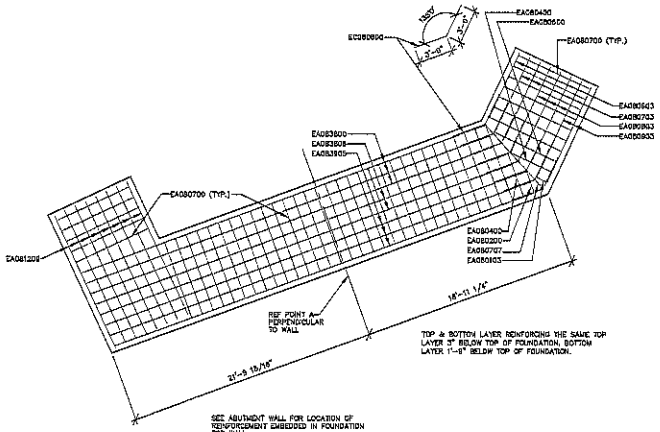


FOUNDATION PLAN - ABUTMENT "A"
SCALE: 1" = 5'

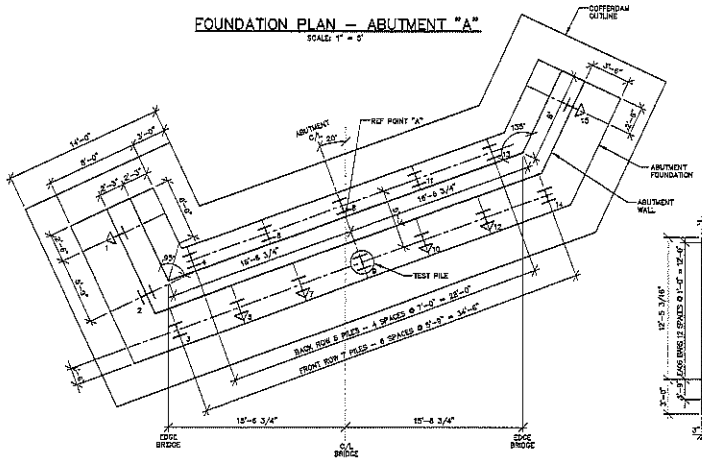


PILE LOCATION PLAN - ABUTMENT "A"
SCALE: 1" = 5'

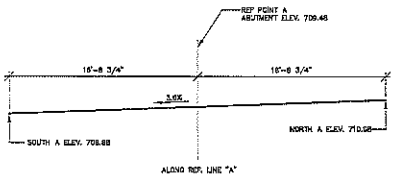


ABUTMENT "A" CROWN DETAIL
SCALE: 1" = 5'

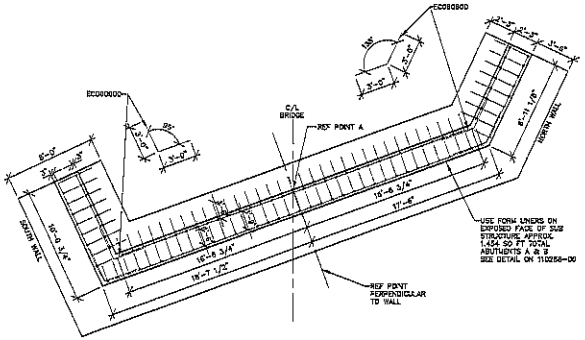


PLAN THROUGH - ABUTMENT "A"
SCALE: 1" = 5'

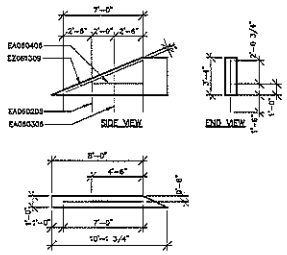


SLOPEWALL DETAIL - TYPICAL ALL FOUR WALLS
SCALE: 1" = 5'

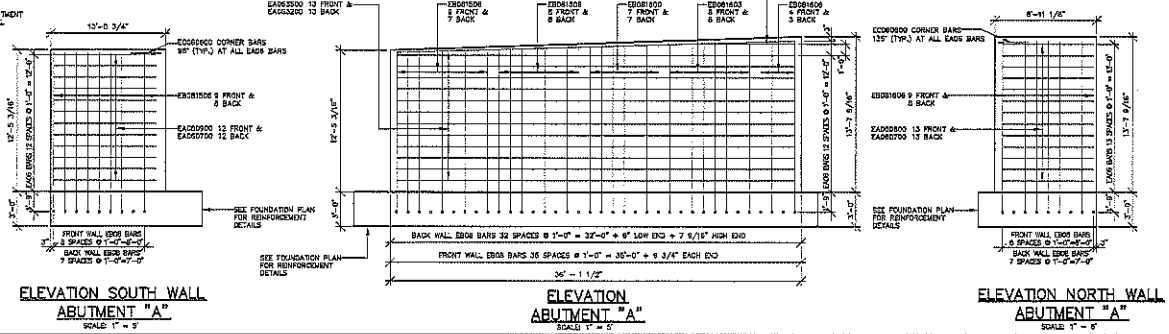


ELEVATION SOUTH WALL ABUTMENT "A"
SCALE: 1" = 5'

ELEVATION ABUTMENT "A"
SCALE: 1" = 5'

ELEVATION NORTH WALL ABUTMENT "A"
SCALE: 1" = 5'

## QUANTITIES THIS SHEET

| ITEM | QTY. |
|---|---|
| Pile, Steel, Furn and Driven, 12 Inch, LRFD | 1766 Ft |
| Pile Point, Steel, LRFD | 30 Ea |
| Test Pile, Steel, 12 Inch, LRFD | 2 Ea |
| Pile Driving Equipment, Furn, LRFD (801 of 14-01-26) | 1 LS |
| Substructure Conc | 212 Cyd |

## NOTES

FOR MOLDING AND BEVEL DETAILS SEE SPECIAL DETAIL B-103-E.

POSITION DOWELS ARE TO BE SET BY DRILLING AND GROUTING AFTER BOX BEAMS ARE SET IN FINAL POSITION (INCLUDED WITH BOX BEAMS).

ALL REQUIRED JOINT FILLER IS INCLUDED WITH CONSTRUCTION AND IS NOT A PAY ITEM.

DRIVE ALL PILES TO A NOMINAL PILE DRIVING RESISTANCE NOT LESS THAN 350 KIPS. DETERMINE NOMINAL PILE DRIVING RESISTANCE (Rndr) USING THE MHA MODIFIED GATES DYNAMIC FORMULA.

THE ESTIMATED PILE LENGTH IS BASED ON THE STATIC ANALYSIS.

BATTER PILES FOR ABUTMENTS A & B SHALL BE DRIVEN TO A 3H:1H BATTER ANGLE.

STEEL PILES SHALL BE HP 12X53

PILES ARE TO BE DRIVEN TO SUCH ACCURACY THAT THE ENDS OF THE PILES TO BE EMBEDDED IN THE CONCRETE ARE WITHIN 3 INCHES OF THE LOCATION SHOWN ON THE PLANS.

USE STEEL FOR H-PILES THAT HAVE A YIELD STRENGTH NOT LESS THAN 50,000 PSI.

THE SUBSTRUCTURE QUANTITY IS COMPUTED ON THE BASIS THAT THE VOLUME OF CONCRETE DISPLACED BY THE EMBEDMENT OF THE PILES IS INCLUDED.

THE SUBSTRUCTURE ABUTMENTS AND WALLS SHOULD HAVE AN "18 INCH RUNNING BOND" PATTERN OF 4 FT X 1-1/2 FTOUT STONE BLOCKS FORM LINERS SUCH AS OFFERED BY KARLSON FORMING SPECIALTIES INC. INCLUDED IN THE CONC AESTHETIC TREATMENT ITEM.

## 12" STEEL PILES LRFD
## BOTH ABUTMENTS - 60 TON CAPACITY
## Rndr = 350 KIPS

| | NO. REQ'D | | ABUTMENT A | | ABUTMENT B | |
|---|---|---|---|---|---|---|
| | A | B | EST. FT EA. | TOTAL | EST. FT EA. | TOTAL |
| VERTICAL | 8 | 8 | 57 | 456 | 57 | 456 |
| VERT. TEST | 1 | 1 | 67 | 67 | 67 | 67 |
| BATTER | 6 | 6 | 60 | 360 | 60 | 360 |
| TOTAL ESTIMATED PILE LENGTH | | | | | | 1766 |
| TEST PILE | | | | | | 2 EA |
| PILE POINTS | | | | | | 30 EA |
| FURNISHING EQUIPMENT FOR DRIVING PILE | | | | | | LUMP SUM |

## SUBSTRUCTURE CONCRETE QUANTITIES

| POUR | GRADE S2 CYDS | |
|---|---|---|
| | ABUTMENT A | ABUTMENT B |
| FND | 47.8 CYDS | 47.8 CYDS |
| ABUT | 37.6 CYDS | 38.6 CYDS |
| WING NORTH | 10.1 CYDS | 11 CYDS |
| WING SOUTH | 9.8 CYDS | 9.8 CYDS |
| TOTAL SUBSTRUCTURE CONCRETE - ABUTMENTS | | 212 CYDS |

| REV. | DESCRIPTION | BY | DATE |
|---|---|---|---|
| 03 | FINAL PLAN ISSUE | CRL | 12/09/2011 |
| 02 | GRADE INSPECTION COMMENTS | CRL | 11/30/2011 |
| 01 | GRADE INSPECTION PANELS | CRL | 10/31/2011 |

THE REPRODUCTION, COPYING OR OTHER USE OF THIS DRAWING WITHOUT WRITTEN CONSENT IS PROHIBITED. © 2011 WIGHTMAN & ASSOCIATES, INC.

WIGHTMAN & ASSOCIATES, INC.
ENGINEERING ◆ SURVEYING ◆ ARCHITECTURE
2583 PIPESTONE ROAD
BENTON HARBOR, MI 49022
PHONE (269) 927-0100
FAX (269) 927-1900
www.wightman-assoc.com

CASS COUNTY ROAD COMMISSION
CASS COUNTY, MICHIGAN

SINK ROAD BRIDGE REPLACEMENT OVER DOWAGIAC RIVER

ABUTMENT "A" DETAILS

JOB NO. 110288

DRAWN BY T.J.R. | CHECKED BY S.W.S.H.

DATE SEPTEMBER, 2011

SCALE AS SHOWN

110288-05

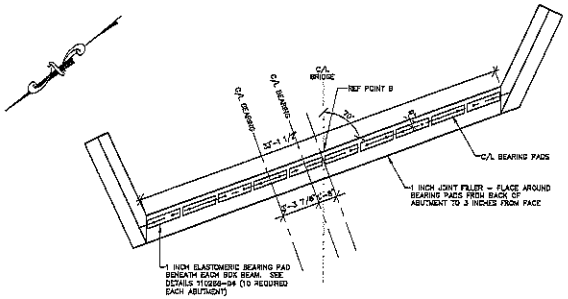


PLAN TOP OF – ABUTMENT "B"
SCALE: 1" = 5'

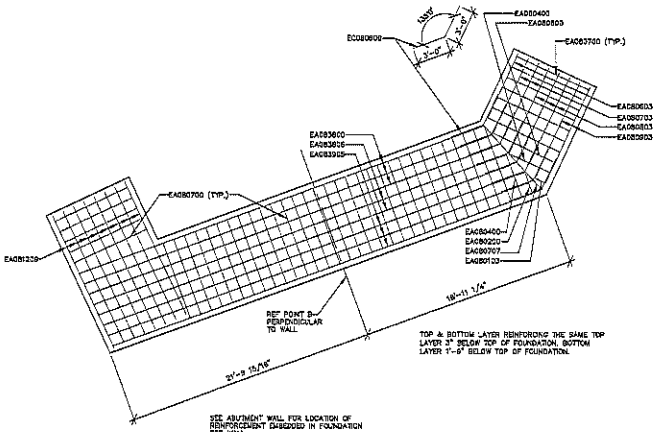


FOUNDATION PLAN – ABUTMENT "B"
SCALE: 1" = 5'

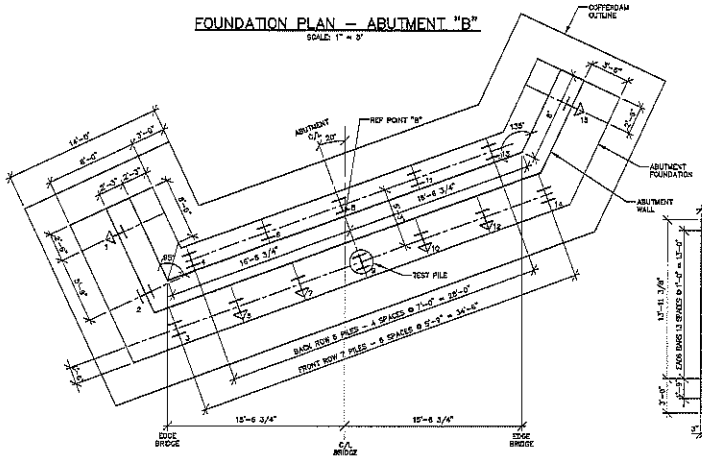


PILE LOCATION PLAN – ABUTMENT "B"
SCALE: 1" = 5'

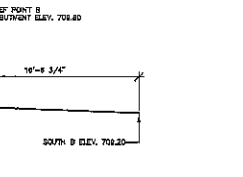


ABUTMENT "B" CROWN DETAIL
SCALE: 1" = 5'

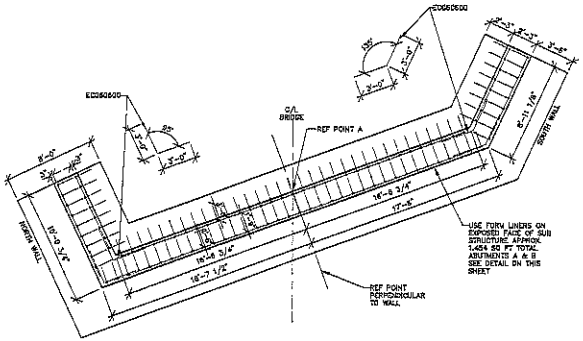


PLAN THROUGH – ABUTMENT "B"
SCALE: 1" = 5'

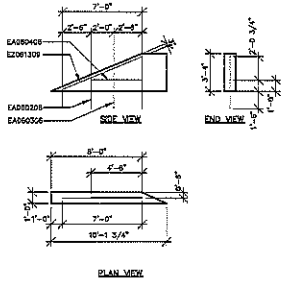


SLOPEWALL DETAIL – TYPICAL ALL FOUR WALLS
SCALE: 1" = 5'

Karlson Forming Specialties Inc.

## 18" Running Bond

3-1/8" thick, 2-3/4" maximum relief

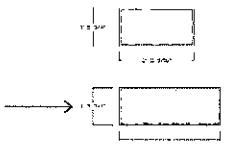

FORM LINER DETAIL
N.T.S.

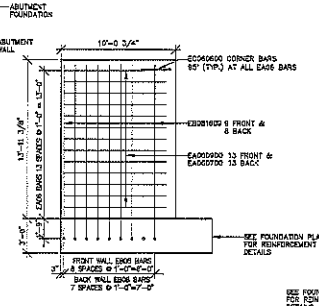


ELEVATION NORTH WALL
ABUTMENT "B"
SCALE: 1" = 5'

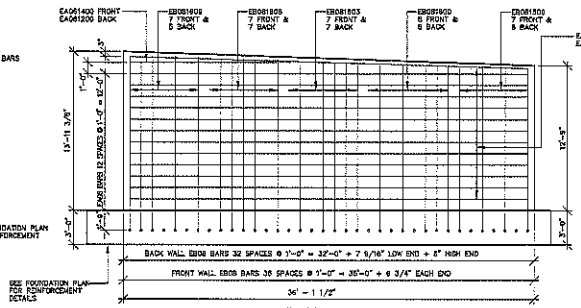


ELEVATION
ABUTMENT "B"
SCALE: 1" = 5'

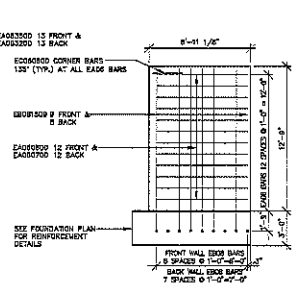


ELEVATION SOUTH WALL
ABUTMENT "B"
SCALE: 1" = 5'

| REV. | DESCRIPTION | BY | DATE |
|---|---|---|---|
| 03 | FINAL PLAN ISSUE | GRS | 12/09/2011 |
| 02 | GRABE INSPECTION COMMENTS | GRS | 11/30/2011 |
| 01 | GRABE INSPECTION ISSUES | GRS | 10/21/2011 |

THE REPRODUCTION, COPYING OR OTHER USE OF THIS DRAWING WITHOUT WRITTEN CONSENT IS PROHIBITED. © 2011 WIGHTMAN & ASSOCIATES, INC.

WIGHTMAN & ASSOCIATES, INC.
ENGINEERING ◆ SURVEYING ◆ ARCHITECTURE
3360 PIERSTONE ROAD
PETOSKEY (269) 347-4100
BENTON HARBOR, MI 49022
(269) 927-1300
www.wightman-associates.com

CASS COUNTY ROAD COMMISSION
CASS COUNTY, MICHIGAN
SINK ROAD BRIDGE REPLACEMENT OVER DOWAGIAC RIVER

ABUTMENT "B" DETAILS

JOB NO. 110288

DESIGN BY: T.J.R. | CHECKED BY: [illegible]
DATE: SEPTEMBER, 2011
SCALE: AS SHOWN

110288–06

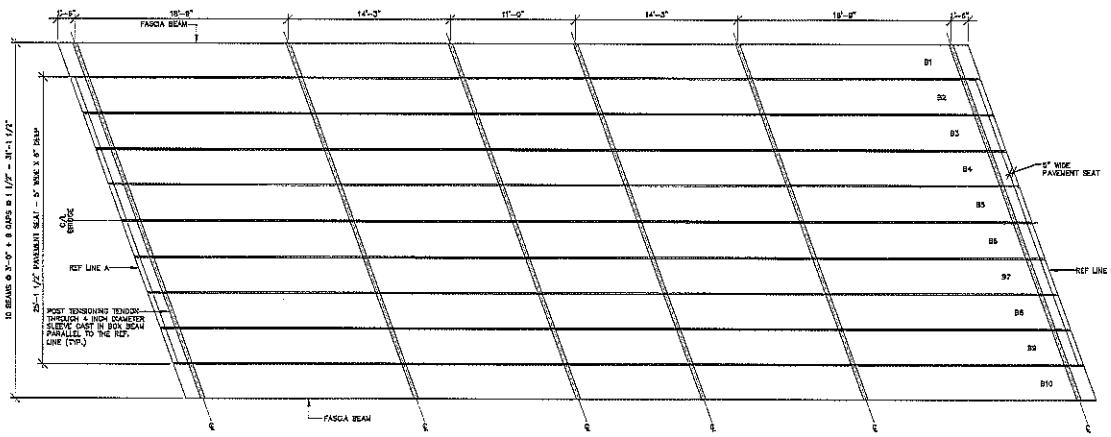


BEAM LOCATION PLAN
SCALE 1" = 5'

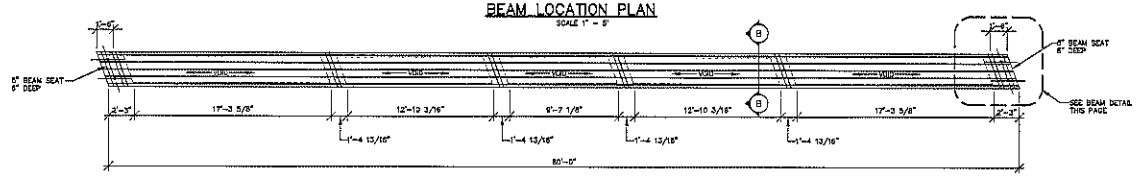


PLAN – BEAM B2–B9
SCALE 1" = 5'

PLAN – BEAM B1 AND B10
SCALE 1" = 5'
BEAM DIMENSIONS ARE THE SAME AS BEAM B2 EXCEPT AS SHOWN

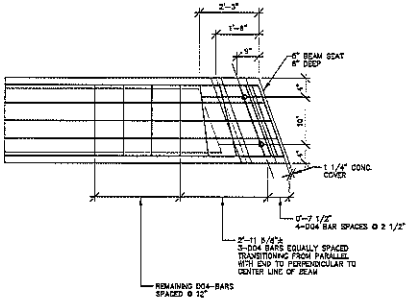


BEAM DETAIL
SCALE 1" = 2

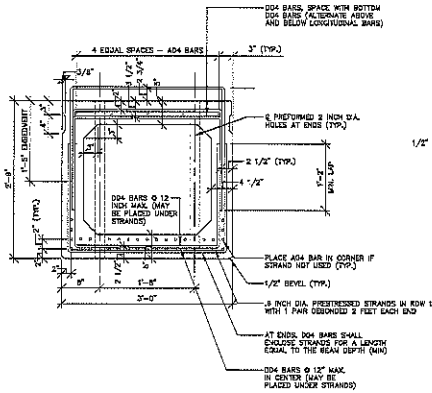


TYPICAL BEAM SECTION B–B
SCALE 1" = 1'

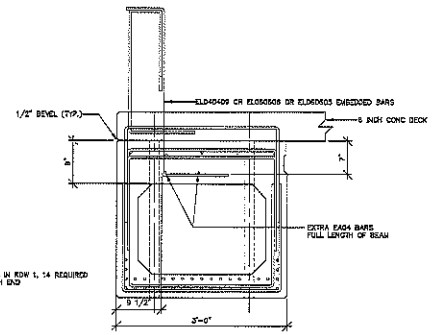


TYPICAL BEAM SECTION C–C
SCALE 1"=1'
DIMENSIONS ARE THE SAME AS SECTION B–B EXCEPT AS SHOWN

| QUANTITIES THIS SHEET | |
|---|---|
| ITEM | QTY. |
| Prest Conc Deck, 33 inch | 2,490 SR |
| Post Tensioning (001 of 14-01-28) | 1 LS |

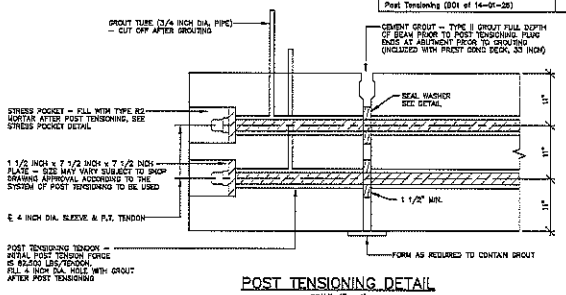


POST TENSIONING DETAIL
SCALE: 1" = 1'

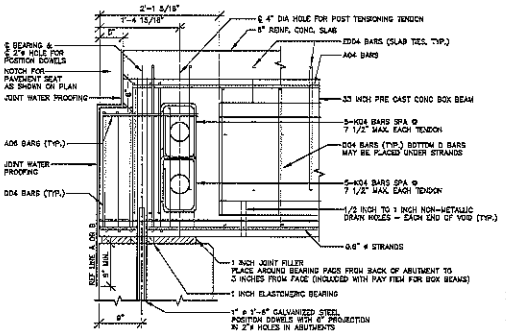


SECTION AT BEAM ENDS
SCALE: 1"=1'

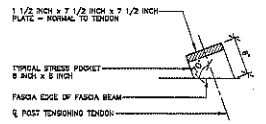


TOP VIEW – STRESS POCKET
SCALE: 1"=1'

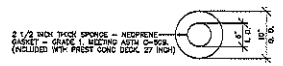


SEAL WASHER DETAIL
SCALE: 1"=1'
NOTE: OTHER MEANS OF SEALING THE POST TENSIONING SLEEVES MAY BE USED BY THE CONTRACTOR AS APPROVED BY THE ENGINEER

## NOTES

THE PREFIX LETTER "E" ON STEEL REINFORCEMENT BAR DESIGNATIONS DENOTES EPOXY COATED STEEL REINFORCEMENT.

PRESTRESSING STRAND SHALL BE .6 INCH DIA. NOMINAL MEETING THE REQUIREMENTS OF ASTM A416M, GRADE 1860, LOW RELAXATION STRAND. ALL 33 INCH BEAMS ARE TO HAVE 14 PRESTRESSED STRANDS EACH, ALL LOCATED IN ROW 1, AND 1 PAIR DEBONDED 2 FEET FROM EACH END. STRANDS SHALL BE TENSIONED TO AN INITIAL PRESTRESS FORCE OF 44,000 LBS PER STRAND. PRESTRESSED CONCRETE BOX BEAMS SHALL ATTAIN A COMPRESSIVE STRENGTH OF 4,000 PSI PRIOR TO STRAND RELEASE.

THE KEY WAY SHALL BE OMITTED ON THE FASCIA SIDE OF ALL FASCIA BEAMS.

CONTRACTOR TO SUBMIT SHOP DRAWINGS OF BOX BEAMS TO ENGINEER FOR APPROVAL PRIOR TO FABRICATION. (3 COPIES REQUIRED)

BEAMS WITH HONEYCOMB OF SUCH EXTENT AS TO AFFECT THE STRENGTH OR RESISTANCE TO DETERIORATION WILL NOT BE ACCEPTED.

DESIGN LOADING = HL93–MOD. LIVE LOAD AND IMPACT DEFLECTION NOT EXCEED LENGTH / 800.

ALL BOX BEAM REINFORCING, ALL JOINT FILLER AROUND BEARINGS, AND ALL POSITION DOWELS ARE INCLUDED WITH BOX BEAMS.

BRIDGE BEAMS ARE TO BE POST TENSIONED PARALLEL TO REFERENCE LINES AS SHOWN. AFTER BEAMS ARE SET AND GROUTED IN ACCORDANCE WITH SECTION 705 OF THE STANDARD SPECIFICATIONS, TWELVE POST TENSIONING TENDONS ARE REQUIRED AS SHOWN.

2 INCH DIA. SLEEVES AND 1 INCH DIA. x 18 INCH GALVANIZED STEEL POSITION DOWELS ARE REQUIRED ON ALL BEAMS. 40 POSITION DOWELS ARE REQUIRED. POSITION DOWELS SHALL BE HOT-DIP GALVANIZED ACCORDING TO AASHTO M 232. POSITION DOWELS ARE INCLUDED IN PAYMENT FOR PREST CONC DECK, 33 INCH.

HEAVY EQUIPMENT, INCLUDING PICKUP TRUCKS, SHALL NOT BE ALLOWED ON ANY BOX BEAM SPAN WHICH IS BEING GROUTED OR WHICH HAS BEEN GROUTED BUT NOT YET POST TENSIONED.

THE VALUE OF "E" USED IN CALCULATING STRAND ELONGATION SHALL BE AS RECOMMENDED BY THE STRAND MANUFACTURER. STRANDS SHALL BE PLACED SYMMETRICALLY ABOUT THE CENTERLINE OF BEAM.

LIFTING DEVICES SHALL BE REMOVED AFTER BEAMS ARE ERECTED. REMOVAL IS INCLUDED IN THE BID ITEM PREST CONC DECK, 33 INCH.

| REV. | DESCRIPTION | BY | DATE |
|---|---|---|---|
| 03 | FINAL PLAN ISSUE | DRL | 12/20/2011 |
| 02 | GRADE INSPECTOR COMMENTS | DRL | 11/30/2011 |
| 01 | GRADE INSPECTOR COMMENTS | DRL | 10/21/2011 |

THE REPRODUCTION, COPYING OR OTHER USE OF THIS DRAWING WITHOUT WRITTEN CONSENT IS PROHIBITED. © 2011 WIGHTMAN & ASSOCIATES, INC.

WIGHTMAN & ASSOCIATES, INC.
ENGINEERING ◆ SURVEYING ◆ ARCHITECTURE
2180 PIPESTONE ROAD
BENTON HARBOR, MI 49022
PHONE: (269) 927-0100
FAX: (269) 927-1300
WWW.WIGHTMAN-ASSOC.COM

CASS COUNTY ROAD COMMISSION
CASS COUNTY, MICHIGAN

SINK ROAD BRIDGE REPLACEMENT OVER DOWAGIAC RIVER

BOX BEAM DETAILS

JOB NO. 110288

DRAWN BY: T.J.R. | CHECKED BY: S.M.P.B.A.W.H.
DATE: SEPTEMBER, 2011
SCALE: AS SHOWN

110288–07

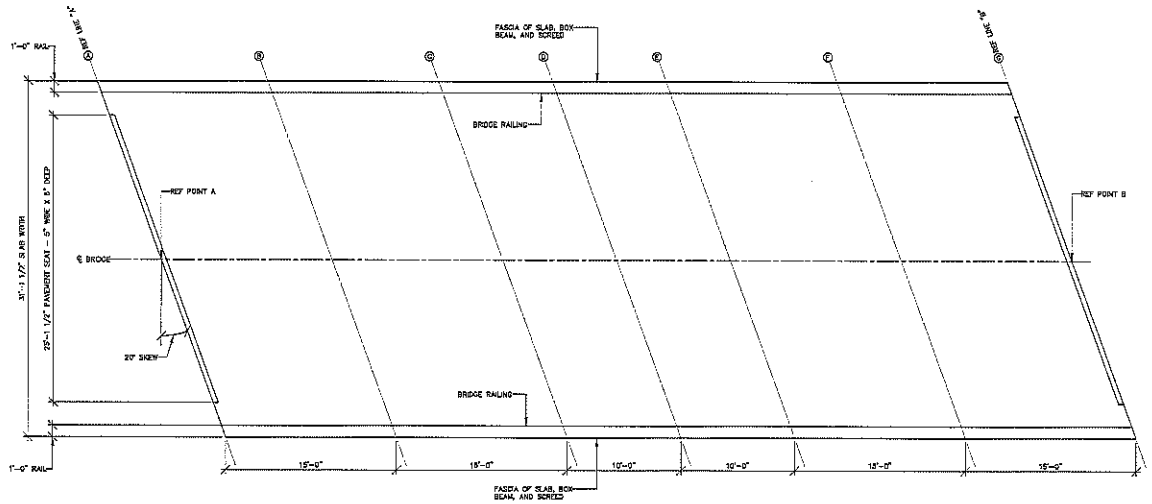


PLAN OF SLAB
SCALE: 1"=5'

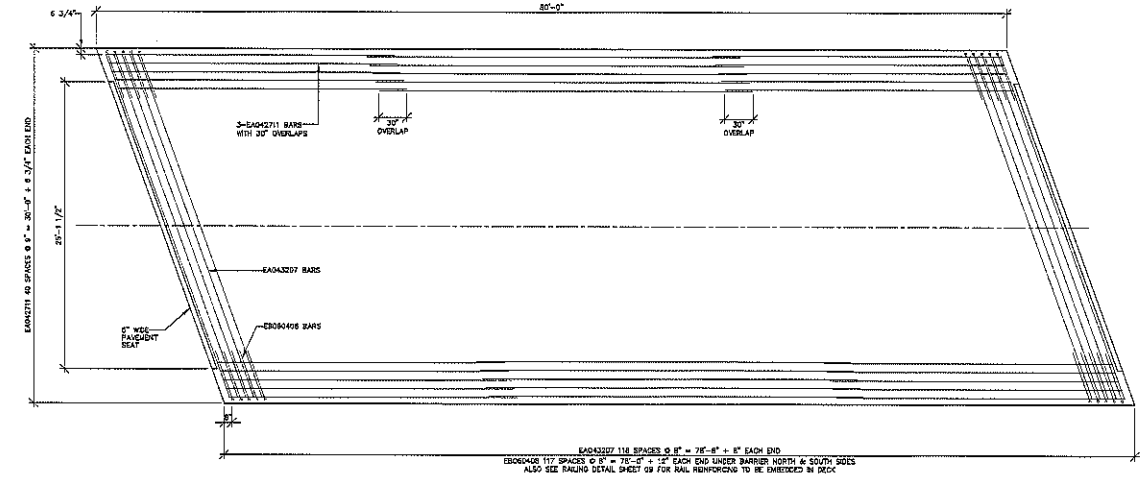


PLAN OF SLAB REINFORCING STEEL
SCALE: 1"=5'

| QUANTITIES THIS SHEET | |
|---|---|
| ITEM | QTY. |
| Superstructure Conc | 49 Cyd |
| Superstructure Conc. Form, Finish, and Cure (BDI of 14-01-25) | 1 LS |

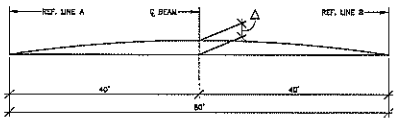


| STAGE | CAMBER (Δ) |
|---|---|
| A | 1.372 INCH |
| B | 1.358 INCH |
| C | .643 INCH |

STAGE A: BEAMS ERECTED, GROUTED, & POST TENSIONED. NO OTHER LOADS APPLIED. THIS IS CAMBER DUE TO PRESTRESSING FORCE AND DEAD LOAD OF BEAM AND GROUTING

STAGE B: FORMS (IF ANY) & REINFORCING IN PLACE

STAGE C: SLAB & BRIDGE RAIL POURED - BRIDGE COMPLETE

CAMBER ORDINATES

| LOCATION | A | B | C | D | E | F | G |
|---|---|---|---|---|---|---|---|
| FASCIA - NORTH | 713.41 | 713.51 | 713.61 | 713.68 | 713.69 | 713.71 | 713.73 |
| ROAD ℄ | 712.61 | 712.91 | 713.05 | 713.08 | 713.09 | 713.11 | 713.13 |
| FASCIA - SOUTH | 712.21 | 712.31 | 712.41 | 712.48 | 712.49 | 712.61 | 712.53 |

SCREED ELEVATIONS

| SUPERSTRUCTURE CONCRETE | |
|---|---|
| DECK | 46.1 CYD |
| RAILS | 3.0 CYD |
| TOTAL | 49 CYD |

NOTES:

FOR DETAILS OF BEVELS & MOLDINGS, SEE SPECIAL DETAIL B-103-E.

THE PREFIX LETTER "E" ON STEEL REINFORCEMENT BAR DESIGNATIONS DENOTES EPOXY COATED STEEL REINFORCEMENT.

THE ESTIMATED BEAM CAMBER IS 1.42 INCHES. THE CAMBER IS DUE TO PRESTRESS AND DEAD LOAD OF BEAM ONLY.

SCREED ELEVATIONS ARE BASED ON THE CONDITION THAT NO SLAB CONCRETE HAS BEEN CAST AND THAT FORMWORK (IF ANY) AND STEEL REINFORCEMENT ARE IN PLACE.

A TRANSVERSE STRIKE OFF FINISHING MACHINE IS TO BE USED IN PLACING DECK CONCRETE.

SCREED RAIL FOR FINISHING OF DECK CONCRETE SHALL BE LOCATED ON THE FASCIA BEAM.

THE CONTRACTOR SHALL SUBMIT A POUR SCHEDULE TO THE ENGINEER FOR APPROVAL.

| REV. | DESCRIPTION | BY | DATE |
|---|---|---|---|
| 03 | FINAL PLAN ISSUE | GRL | 12/09/2011 |
| 02 | CRACK INSPECTION COMMENTS | GRL | 11/30/2011 |
| 01 | CRACK INSPECTION ISSUES | GRL | 10/31/2011 |

THE REPRODUCTION, COPYING OR OTHER USE OF THIS DRAWING WITHOUT WRITTEN CONSENT IS PROHIBITED. © 2011 WIGHTMAN & ASSOCIATES, INC.

WIGHTMAN & ASSOCIATES, INC.
ENGINEERING ◆ SURVEYING ◆ ARCHITECTURE
2503 PIPESTONE ROAD
BENTON HARBOR, MI 49022
PHONE: (269) 927-0100
FAX: (269) 927-1100
WWW.WIGHTMAN-ASSOC.COM

CASS COUNTY ROAD COMMISSION
CASS COUNTY, MICHIGAN

SINK ROAD BRIDGE REPLACEMENT OVER DOWAGIAC RIVER

SUPERSTRUCTURE DETAILS

JOB NO. 110288

DRAWN BY T.J.R. | CHECKED BY S.M.D.R. 5.12.2011
DATE SEPTEMBER, 2011
SCALE AS SHOWN

110288-08

| QUANTITIES THIS SHEET | |
|---|---|
| ITEM | QTY. |
| _Conc Aesthetic Treatment | 1 LS |
| _Conc Staining Option | 1 LS |
| Bridge Railing, Aesthetic Parapet Tube | 128 FT |

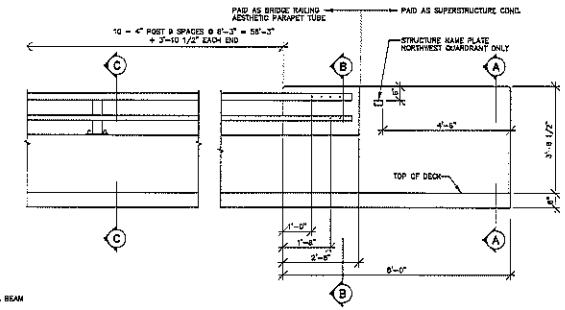


END WALL ELEVATION ON DECK
SCALE: 1"=2"

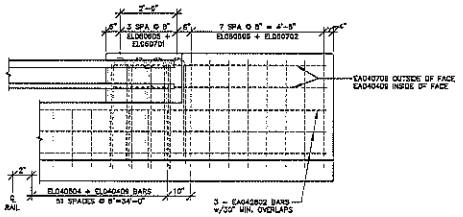


END WALL DETAIL
SCALE: 1"=2"

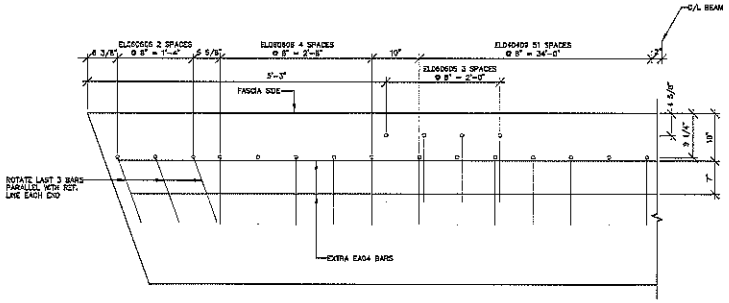


DETAIL BRIDGE RAILING REBAR IN FASCIA BEAM
SCALE: 1"=1"

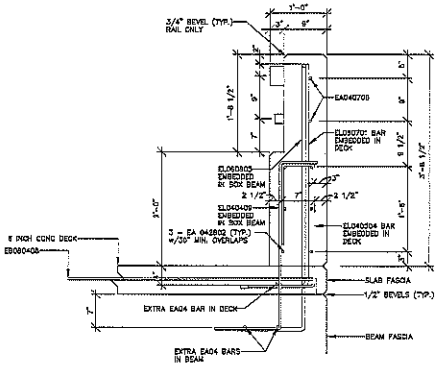


SECTION "B-B" AT ENDWALL
SCALE: 1"=1"

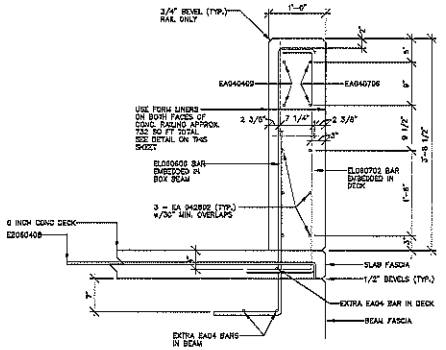


SECTION "A-A" AT ENDWALL
SCALE: 1"=1"

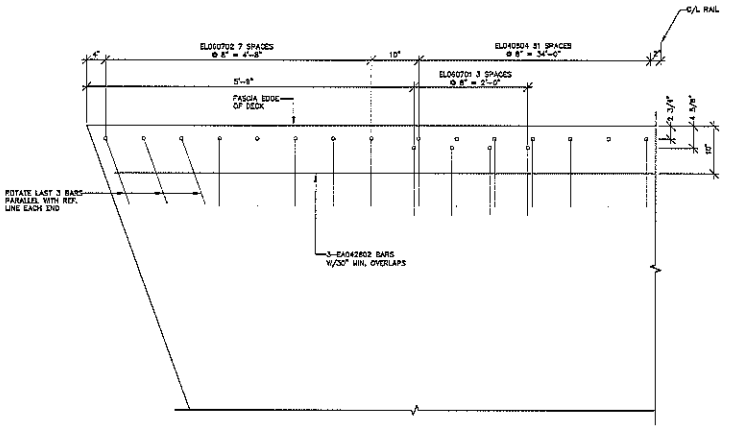


DETAIL BRIDGE RAILING REBAR IN DECK
SCALE: 1"=1"

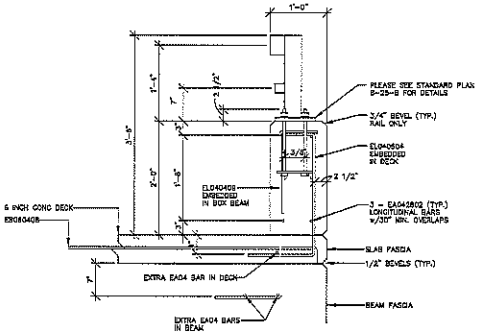


SECTION "C-C" AT RAILING
SCALE: 1"=1"

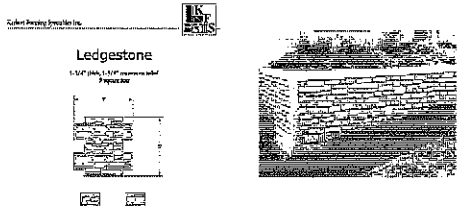


FORM LINER DETAILS
N.T.S.

## NOTES:

FOR DETAILS OF BEVELS & MOLDINGS, SEE STANDARD PLAN B-103-E. BRIDGE RAILING IS TO BE AESTHETIC PARAPET TYPE FOR DETAILS ON THIS SHEET. ALL EXPOSED RAILING CORNERS SHALL HAVE 3/4" BEVELS.

PARAPET RAILING SHALL NOT BE CAST UNTIL SLAB CONCRETE HAS ATTAINED AT LEAST 75% OF ITS DESIGN STRENGTH AS DETERMINED BY TABLE 701-1 OF THE STANDARD SPECIFICATIONS. THE RESTRICTIONS OF SECTION 705.03.H REGARDING HEAVY EQUIPMENT SHALL BE OBSERVED.

THE AESTHETIC PARAPET RAIL SHOULD HAVE A "LEDGESTONE" PATTERN OF STACKED RANDOM STONE, SIMILAR TO THE STONEWORK FORM LINERS OFFERED BY KAYLEEN FORMING SPECIALTIES INC. INCLUDED IN THE CONC AESTHETIC TREATMENT ITEM.

THE PREFIX LETTER "E" ON STEEL REINFORCEMENT BAR DESIGNATIONS DENOTES EPOXY COATED STEEL REINFORCEMENT

BRIDGE NAMEPLATE LOCATION NORTH WEST QUADRANT ONLY

| REV'T | DESCRIPTION | BY | DATE |
|---|---|---|---|
| 03 | FINAL PLAN ISSUE | GKL | 12/06/2011 |
| 02 | GRADE INSPECTION COMMENTS | GKL | 11/28/2011 |
| 01 | GRADE INSPECTION ISSUES | GKL | 10/25/2011 |

THESE PLANS AND DESIGNS ARE THE PROPERTY OF WIGHTMAN & ASSOCIATES, INC. AND ARE NOT TO BE USED IN WHOLE OR IN PART WITHOUT THE WRITTEN CONSENT OF WIGHTMAN & ASSOCIATES, INC. © 2011 WIGHTMAN & ASSOCIATES, INC.

WIGHTMAN & ASSOCIATES, INC.
ENGINEERING ◆ SURVEYING ◆ ARCHITECTURE
2383 PIPESTONE ROAD
BENTON HARBOR, MI 49022
PHONE: (269) 927-0100
FAX: (269) 927-1900
WWW.WIGHTMAN-ASSOC.COM

CASS COUNTY ROAD COMMISSION
CASS COUNTY, MICHIGAN

SINK ROAD BRIDGE REPLACEMENT OVER DOWAGIAC RIVER

RAILING DETAILS

JOB NO. 110288

| DRAWN BY | CHECKED BY | DATE | SCALE |
|---|---|---|---|
| T.J.R. | [illegible] | SEPTEMBER, 2011 | AS SHOWN |

110288-09

| | | BAR | DIMENSION A | B | C | D | E | F | G | H | NO. REQ'D | TOTAL MASS |
|---|---|---|---|---|---|---|---|---|---|---|---|---|
| ABUTMENTS | END WALLS | EA081202 | 12'-9" | | | | | | | | 32 | 1089.36 |
| | | EA080700 | 7'-0" | | | | | | | | 172 | 3214.68 |
| | | EA080400 | 4'-0" | | | | | | | | 6 | 65.44 |
| | | EA080200 | 2'-0" | | | | | | | | 4 | 21.35 |
| | | EA080707 | 7'-7" | | | | | | | | 4 | 80.92 |
| | | EA080103 | 1'-3" | | | | | | | | 4 | 13.35 |
| | | EA080800 | 8'-0" | | | | | | | | 4 | 84.08 |
| | | EA083600 | 36'-0" | | | | | | | | 12 | 1217.82 |
| | | EA083800 | 38'-0" | | | | | | | | 8 | 822.38 |
| | | EA083905 | 39'-5" | | | | | | | | 12 | 1262.91 |
| | | EA080803 | 8'-3" | | | | | | | | 4 | 65.75 |
| | | EA080703 | 7'-3" | | | | | | | | 8 | 134.85 |
| | | EA080803 | 8'-3" | | | | | | | | 12 | 264.33 |
| | | EA080903 | 9'-3" | | | | | | | | 8 | 197.36 |
| | | EC080900 | 9'-0" | 3'-0" | | | | 2'-1" | 3'-9" | | 32 | 312.64 |
| | WALLS | EB081505 | 1'-6" | 14'-0" | | | | | | | 53 | 1368.71 |
| | | EB081509 | 1'-6" | 14'-3" | | | | | | | 46 | 1834.40 |
| | | EB081603 | 1'-6" | 14'-6" | | | | | | | 30 | 1201.80 |
| | | EB081803 | 1'-6" | 14'-9" | | | | | | | 30 | 1301.63 |
| | | EB081505 | 1'-6" | 15'-0" | | | | | | | 38 | 1574.09 |
| | | EB081509 | 1'-6" | 15'-3" | | | | | | | 29 | 1295.85 |
| | | EA082900 | 9'-0" | | | | | | | | 25 | 337.95 |
| | | EA080700 | 7'-0" | | | | | | | | 51 | 539.21 |
| | | EA083500 | 35'-0" | | | | | | | | 28 | 1366.32 |
| | | EA083200 | 32'-0" | | | | | | | | 26 | 1249.98 |
| | | EA080800 | 8'-0" | | | | | | | | 26 | 312.42 |
| | | EA081400 | 14'-0" | | | | | | | | 1 | 21.03 |
| | | EA081200 | 12'-0" | | | | | | | | 1 | 18.02 |
| | | EC068600 | 6'-3" | 3'-0" | | | | 3'-0" | 3'-0" | | 50 | 450.80 |
| | | EC068650 | 6'-1" | 3'-0" | | | | 2'-1" | 3'-0" | | 50 | 450.80 |
| | DECK | E2060408 | 6'-4 1/2" | 0'-3 1/2" | | | | | | | 236 | 1654.20 |
| | | EA042802 | 28'-2" | | | | | | | | 6 | 112.89 |
| | | EA042711 | 27'-11" | | | | | | | | 123 | 2293.75 |
| | | EA043207 | 32'-7" | | | | | | | | 119 | 3393.12 |
| | SLOPE WALLS | EA082208 | 2'-8" | | | | | | | | 4 | 18.03 |
| | | EA083306 | 3'-6" | | | | | | | | 4 | 21.03 |
| | | EA082406 | 4'-6" | | | | | | | | 4 | 27.04 |
| | | EC081306 | 6'-1" | 1'-8" | 7'-7" | | 4'-8" | | 2'-10" | 7'-0" | 4 | 82.61 |
| RAILING | IN RAIL | EA040409 | 4'-9" | | | | | | | | 8 | 28.38 |
| | | EA040706 | 7'-5" | | | | | | | | 6 | 40.08 |
| | | EA042802 | 28'-2" | | | | | | | | 36 | 677.35 |
| | IN DECK | EL080702** | 3'-10 1/2" | 0'-7 1/4" | 1'-6" | | 1'-2 1/4" | -(0'-7 1/4") | | | 32 | 344.48 |
| | | EL080701** | 3'-10 1/2" | 0'-5 3/4" | 1'-5" | | 1'-2 3/4" | | 0'-5 3/4" | | 16 | 170.22 |
| | | EL080304** | 3'-2" | 0'-7" | 1'-5" | | 1'-2" | -(0'-7") | | | 204 | 726.78 |
| | IN SEAM | EL080805* | 4'-7 1/2" | 0'-8" | | | 1'-2 1/2" | 0'-8" | | | 32 | – |
| | | EL080605* | 4'-7 1/2" | 0'-7" | | | 1'-2 1/2" | | 0'-7" | | 16 | – |
| | | EL080409* | 3'-11" | 0'-8" | | | 1'-2" | 0'-8" | | | 204 | – |
| | | | | | | | | | TOTAL | | | 31,448 LBS |

* RAILING REBAR EMBEDDED IN SEAM AND INCLUDED IN PRECAST. CONC. DECK 33 INCH.
** RAILING REBAR EMBEDDED IN DECK

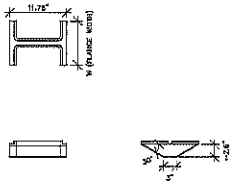


PILE POINT DETAIL

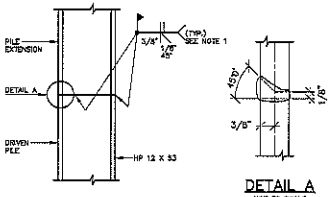


DETAIL A
NOT TO SCALE

PILE SPLICE DETAIL
NOT TO SCALE
FOR PILES IN PLACE (HORIZONTAL JOINT)
NOTE 1:
BACK GOUGE AND GRIND EDGE PREPARATION SMOOTH

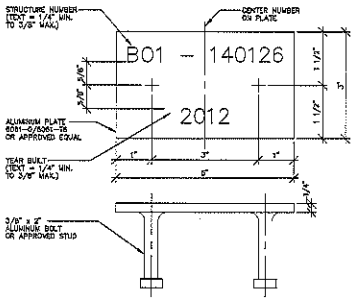


NAMEPLATE DETAIL
NOT TO SCALE

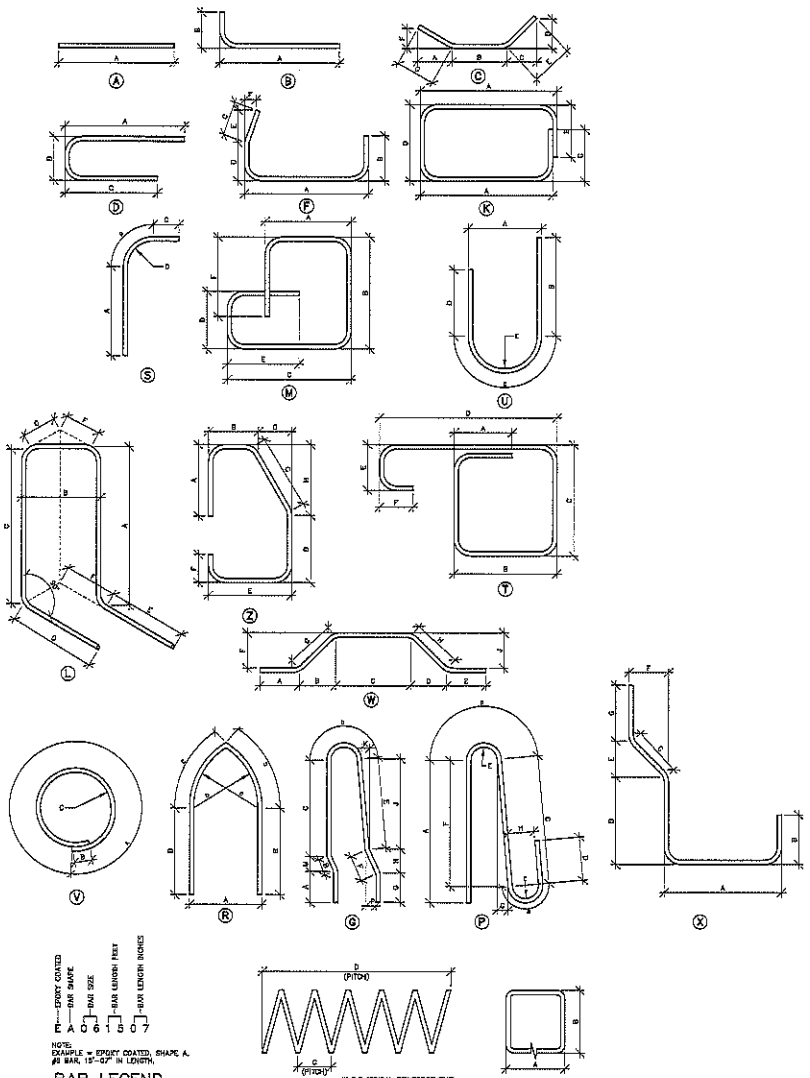


E – A 0 6 – 1 5 0 7
EPOXY COATED — BAR SHAPE — BAR SIZE — BAR LENGTH FEET — BAR LENGTH INCHES

NOTE:
EXAMPLE = EPOXY COATED, SHAPE A, #6 BAR, 15'-07" IN LENGTH.

BAR LEGEND




W 5.5 (SPIRAL REINFORCEMENT)

NOTE: SPIRAL REINFORCING BAR SHALL CONFORM TO ASTM A-82, SIZE W5.5

## NOTES

ALL RIGHT ANGLE BENDS IN REINFORCING STEEL TO BE MADE ABOUT A PIN OF THE MINIMUM DIAMETER ALLOWED BY THE STANDARD SPECIFICATIONS.

THE CONTRACTOR IS RESPONSIBLE FOR CHECKING THE ABOVE REINFORCING STEEL QUANTITIES AND LENGTHS PRIOR TO ORDERING DELIVERY OF STEEL.

STEEL REINFORCEMENT WITH BAR DESIGNATIONS BEGINNING WITH THE LETTER "E" SHALL BE EPOXY COATED

| QUANTITIES THIS SHEET | |
|---|---|
| ITEM | QTY. |
| Reinforcement, Steel, Epoxy Coated | 31,448 Lb |

| REV. | DESCRIPTION | BY | DATE |
|---|---|---|---|
| 02 | FINAL PLAN ISSUE | CBL | 12/29/2011 |
| 01 | GRADE PENETRATION COMMENTS | CBL | 11/30/2011 |

THE REPRODUCTION, COPYING OR OTHER USE OF THIS DRAWING WITHOUT WRITTEN CONSENT IS PROHIBITED. © 2011 WIGHTMAN & ASSOCIATES, INC.

WIGHTMAN & ASSOCIATES, INC.
ENGINEERING ◆ SURVEYING ◆ ARCHITECTURE
2383 PRESTONE ROAD
BENTON HARBOR, MI 49022
PHONE (269) 927-0100
FAX (269) 927-1300
www.wightmanassoc.com

CASS COUNTY ROAD COMMISSION
CASS COUNTY, MICHIGAN

SINK ROAD BRIDGE REPLACEMENT OVER DOWAGIAC RIVER

REINFORCING STEEL DETAILS

JOB NO. 110288

DESIGNED BY: T.J.R.
DRAWN BY: T.J.R.
CHECKED BY: [illegible]
DATE: SEPTEMBER, 2011
SCALE: AS SHOWN

110288–10

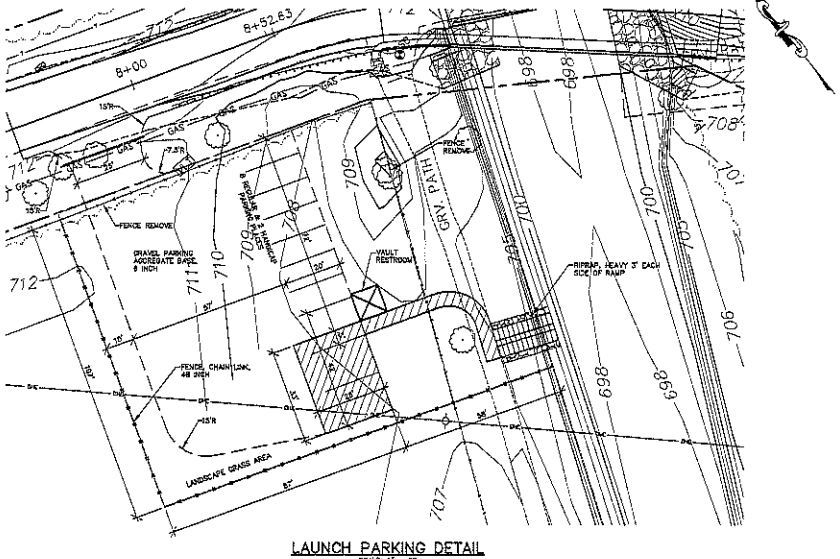


LAUNCH PARKING DETAIL
SCALE: 1" = 20'

PERMEABLE PAVEMENT TO BE ECO-OPTILOC PAVERS MADE BY UNILOCK PRODUCTS

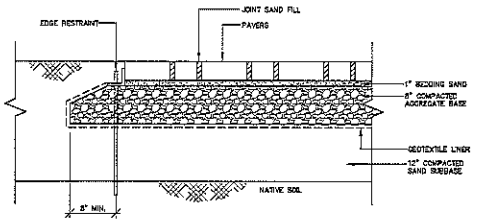


PERMEABLE PAVEMENT SECTION
SCALE: 1" = 1'

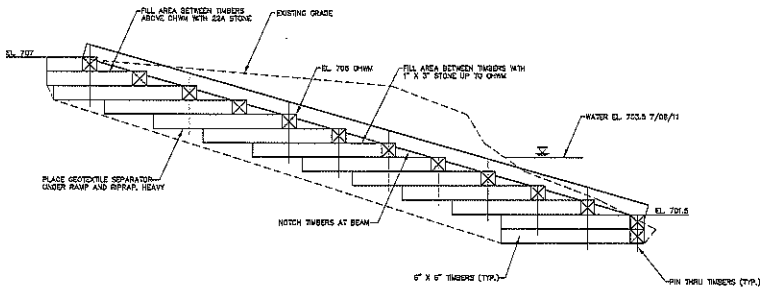


PROFILE – LAUNCH DETAIL
SCALE: 1" = 2'

VAULT RESTROOM DETAILS
MDNR SUPPLIED
SEE SPECIFICATION APPENDIX A

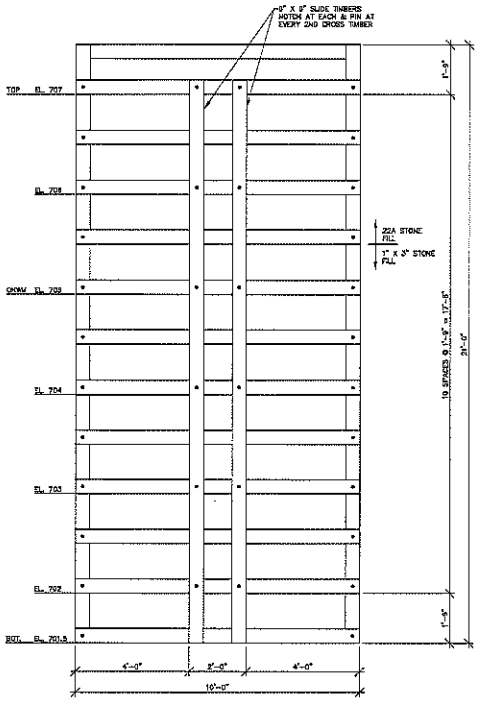


PLAN – LAUNCH DETAIL
SCALE: 1" = 2'

## QUANTITIES THIS SHEET

| ITEM | QTY. |
|---|---|
| Clearing | 0.23 Acre |
| Tree, Rem, 19 inch to 36 inch | 9 Ea |
| Fence, Rem | 169 Ft |
| _Grading, Special | 1,097 Syd |
| _Aggregate, 22A | 3 Cyd |
| _Coarse Gravel 3 x 1 | 9 Cyd |
| Aggregate Base, 6 Inch | 780 Syd |
| Geotextile Separator | 35 Syd |
| _Permeable Pavement | 128 Syd |
| _Restroom Facilities | 1 LS |
| Timber and Lumber, Treated, Furn and Place | 1 MBM |
| Fence, Chain Link, 48 Inch | 252 Ft |
| Riprap, Heavy, Modified | 14 Syd |
| Fertilizer, Chemical Nutrient, Cl A | 4 Lb |
| Mulch | 189 Syd |
| Seeding, Mixture TUF | 9 Lb |
| Topsoil Surface, Salv, 3 Inch | 188 Syd |

## NOTES

ALL WORK THIS DRAWING PART B

ALL TIMBER PAID FOR AS TIMBER AND LUMBER, TREATED, FURN AND PLACE

| REV. | DESCRIPTION | BY | DATE |
|---|---|---|---|
| 01 | FINAL PLAN ISSUE | GRL | 12/09/2011 |
| 03 | MDNR COMMENTS | GRL | 12/07/2011 |
| 02 | ISSUE TO MDNR FOR COMMENTS | GRL | 11/30/2011 |
| 01 | GRADE INSPECTION ISSUE | GRL | 11/09/2011 |

THE REPRODUCTION, COPYING OR OTHER USE OF THIS DRAWING WITHOUT WRITTEN CONSENT IS PROHIBITED. © 2011 WIGHTMAN & ASSOCIATES, INC.

WIGHTMAN & ASSOCIATES, INC.
ENGINEERING ◆ SURVEYING ◆ ARCHITECTURE
2981 PIPESTONE ROAD
PHONE: (269) 927-0100
BENTON HARBOR, MI 49022
FAX: (269) 927-1100
WWW.WIGHTMAN-ASSOC.COM

CASS COUNTY ROAD COMMISSION
CASS COUNTY, MICHIGAN

SINK ROAD BRIDGE REPLACEMENT OVER DOWAGIAC RIVER

CANOE RAMP DETAILS

JOB NO. 110288

DRAWN BY T.J.R.
CHECKED BY
DATE SEPTEMBER, 2011
SCALE AS SHOWN

110288_11

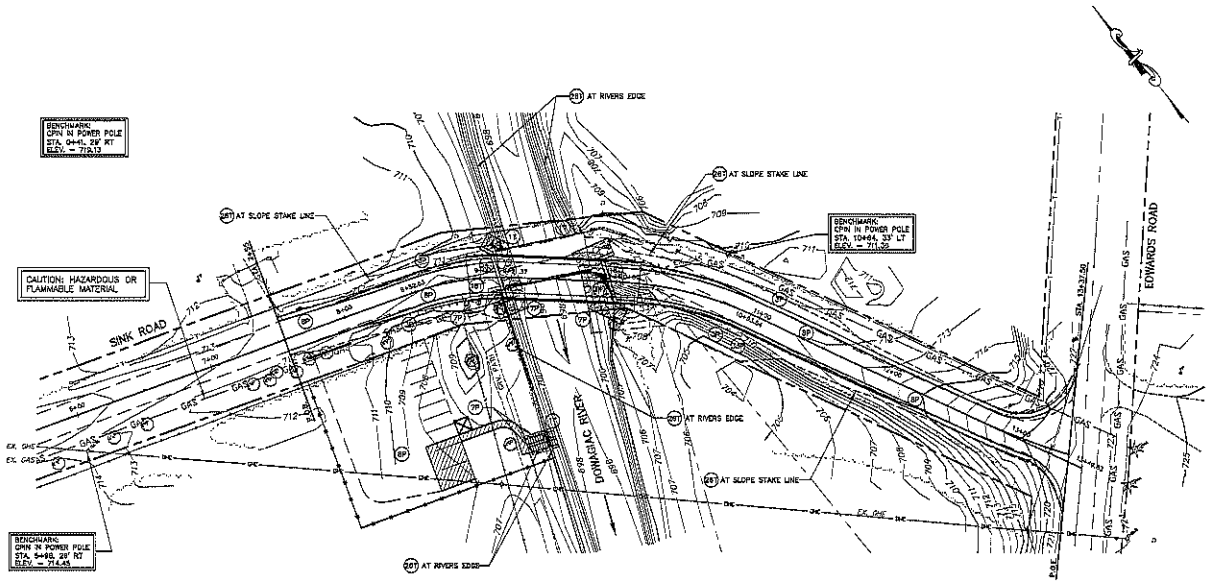


SOIL EROSION AND SEDIMENTION CONTROL PLAN

SCALE: 1" = 40'

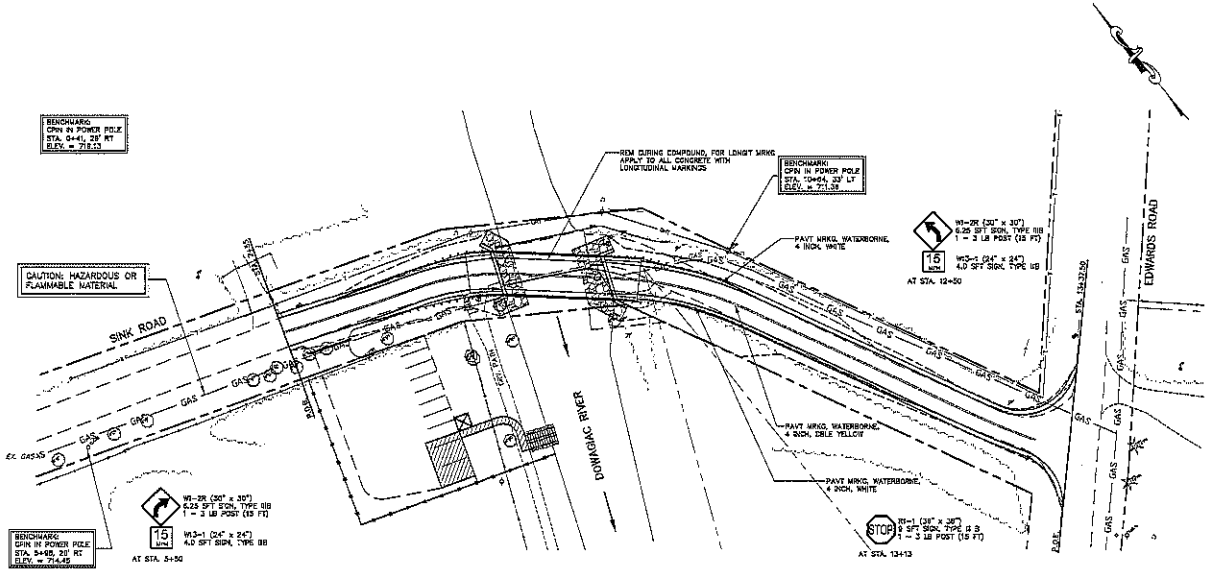


PAVEMENT MARKING AND PERMANT SIGNAGE PLAN

SCALE: 1" = 40'

## QUANTITIES THIS SHEET

| ITEM | QTY. |
|---|---|
| Erosion Control, Filter Bag | 4 Ea |
| Erosion Control, Silt Fence | 1,000 Ft |
| _Turbidity Curtain (Deep) | 78 Ft |
| _Cofferdam, Modified (801 of 14-01-28) | 1 LS |
| Sign, Type XI B | 30 Sft |
| Pavt Mrkg, Waterborne, 4 Inch White | 1,136 Ft |
| Pavt Mrkg, Waterborne, 4 Inch Yellow | 1,136 Ft |
| Rem Curing Compound, for Longit Mrkg | 320 Ft |
| Riprap, Heavy, Modified | 200 Syd |

## SOIL EROSION & SEDIMENTATION CONTROL NOTES

1. ALL CONSTRUCTION METHODS SHALL BE DONE IN COMPLIANCE WITH THE MICHIGAN SOIL EROSION AND SEDIMENTATION CONTROL ACT. THE OWNER SHALL BE RESPONSIBLE FOR OBTAINING A "SOIL EROSION PERMIT" FROM CASS COUNTY. THE CONTRACTOR SHALL BE RESPONSIBLE FOR COMPLYING WITH ALL REQUIREMENTS OF THE CASS COUNTY "SOIL EROSION PERMIT". EROSION CONTROL MEASURES SHOWN ON THE PLANS ARE THE MINIMUM REQUIREMENTS AND SHALL NOT RELIEVE THE CONTRACTOR'S RESPONSIBILITY FOR PROVIDING ALL REQUIRED EROSION CONTROL MEASURES.
2. AVOID UNNECESSARY DISTURBING OR REMOVING OF EXISTING VEGETATED TOPSOIL OR EARTH COVER, THESE COVER AREAS ACT AS SEDIMENT FILTERS.
3. ALL TEMPORARY SOIL EROSION PROTECTION SHALL REMAIN IN PLACE UNTIL REMOVAL IS REQUIRED FOR FINAL CLEAN UP AND APPROVAL.
4. GEOTEXTILE SILT FENCE SHALL BE INSTALLED AS REQUIRED WHEN CROSSING CREEKS OR WHEN ADJACENT TO WETLANDS OR SURFACE WATER BODIES TO PREVENT SILTATION AND ELSEWHERE AS DIRECTED BY THE ENGINEER. SEEDING AND/OR SODDING SHALL BE INSTALLED ON CREEK BANKS IMMEDIATELY AFTER CONSTRUCTION TO PREVENT EROSION. ALL WORK WILL BE DONE IN ACCORDANCE WITH STANDARD PLAN R-98-E, SOIL EROSION & SEDIMENTATION CONTROL MEASURES.
5. MAINTENANCE, CLEANING, AND REMOVAL OF THE VARIOUS SEDIMENT CONTROL MEASURES SHALL BE INCLUDED IN THE VARIOUS EROSION CONTROL ITEMS.

(##) NUMBER IN CIRCLE REFERS TO NUMBERED DETAILS ON MDOT STANDARD PLAN R-98-E, SOIL EROSION AND SEDIMENTATION CONTROL MEASURES. "P" DENOTES PERMANENT MEASURE AND "T" DENOTES TEMPORARY MEASURE. SOIL EROSION CONTROL PLANS DENOTE MINIMUM EROSION MEASURES AS DESCRIBED BELOW.

(17) DENOTES TEMPORARY TURBIDITY CURTAIN

(36) DENOTES PERMANENT/TEMPORARY SEEDING. ALL DISTURBED AREAS NOT PAVED OR GRAVELED SHALL BE RESTORED.

(78) DENOTES PERMANENT RIPRAP

(91) DENOTES AGGREGATE COVER/PERMANENT PAVEMENT RESTORATION

(81) DENOTES TEMPORARY DEWATERING WITH FILTER BAG

(867) DENOTES TEMPORARY SILT FENCE. SILT FENCE SHALL BE INSTALLED AT CREEK CROSSINGS ADJACENT TO ALL WETLANDS AND SURFACE WATERS, AND OTHER LOCATIONS AS DIRECTED BY THE ENGINEER.

(328) DENOTES PERMANENT MULCH BLANKETS

(543) DENOTES TEMPORARY STEEL SHEET PILING COFFERDAM.

| REV. | DESCRIPTION | BY | DATE |
|---|---|---|---|
| 03 | FINAL PLAN ISSUE | CRL | 12/09/2011 |
| 02 | GRADE INSPECTION COMMENTS | CRL | 11/30/2011 |
| 01 | GRADE INSPECTION ISSUE | CRL | 11/09/2011 |

© REPRODUCTION, COPYING OR USE OF THIS DRAWING WITHOUT WRITTEN CONSENT IS PROHIBITED. © 2011 WICHTMAN & ASSOCIATES, INC.

WICHTMAN & ASSOCIATES, INC.
ENGINEERING ◆ SURVEYING ◆ ARCHITECTURE
2389 PIPESTONE ROAD
BENTON HARBOR, MI 49022
PHONE: (269) 927-0100
FAX: (269) 927-4100
www.WICHTMAN-ASSOC.com

CASS COUNTY ROAD COMMISSION
CASS COUNTY, MICHIGAN

SINK ROAD BRIDGE REPLACEMENT OVER DOWAGIAC RIVER

SOIL EROSION AND SEDIMENTATION CONTROL PLAN
AND PAVEMENT MARKING AND PERMANENT SIGNAGE PLAN

JOB NO. 110288

DRAWN BY: T.J.R.
CHECKED BY: [illegible]
DATE: SEPTEMBER, 2011
SCALE: 1" = 40'

110288_12